Serie VTS

FluidMix® Effective Mixing

Tank m³

3 — 50 — 100



Mixer with axial pitched blades turbine. Due to its simplicity, the VTS is characterised by its great versatility, as it can be used in a wide variety of applications by changing only the inclination, dimensions or number of blades.

Fitted with generously dimensioned hollow shaft gearboxes, capable of withstanding high stresses over the entire service life of the agitator.

- 0,25 Kw to 2,2Kw
- 4–15m³
- 400-800 mm
- 75 rpm 100 rpm 150 rpm
- L<2500 mm
- AISI 316 AISI 304 CARBON STEEL

SECTORS

More common: Water treatment plants, Paper , Chemistry
Other uses: Food grade, Painting, Petrochemicals

EXTRA OPTIONS:

- Changeable turning sense
- Food grade execution, Polishing
- Seal
- Atex

MATERIALS

Ebonite
AISI 316
AISI 304
Duplex
Super duplex
Titanium
Hastelloy
...

Fluidmix - Effective Mixing

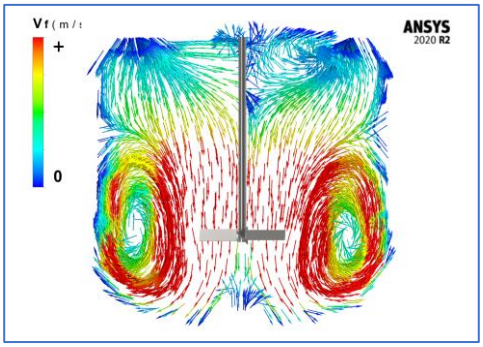

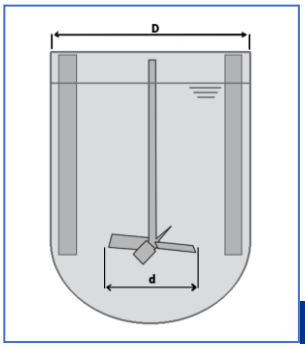

AXIAL FLOW

POSITION:
CENTERED WITH BAFFLES
OFF-CENTERED WITH OUT BAFFLES

RELATION d/D= 0,2-0,5

HIGH SHEAR STRESS

ABLE TO WORK WITH EMPTY TANKS



Serie VPS

Find this product at the following linkt to our website:

www.agitadoresfluidmix.com/agitador-industrial-vps/

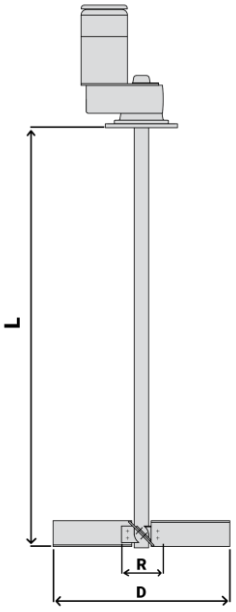

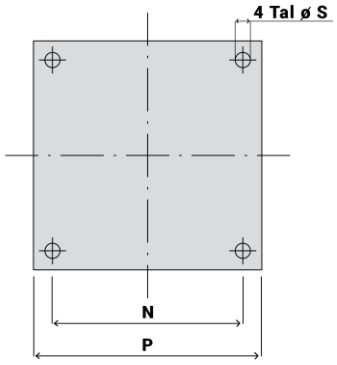

Model	Pow. (Kw)	Speed (rpm)	D (mm)	R (mm)	P (mm)	N (mm)	S (mm)	Weigth (Kg)
VTS4-02 02 C 00/25.6	0,25	107	400	190	280	230	16	45
VTS4-03 02 C 01/25.6	0,37	96	500	200	280	230	16	50
VTS4-04 02 C 01/25.6	0,55	99	500	200	300	250	16	55
VTS4-05 02 C 02/25.6	0,75	96	600	200	300	250	16	60
VTS4-06 02 C 02/25.6	1,1	97	600	210	300	250	16	65
VTS4-07 02 C 03/25.6	1,5	99	700	210	300	250	16	85
VTS4-08 02 C 04/25.6	2,2	99	800	220	300	250	16	95
L= Max. Length 2500mm								

APPLICATIONS

MIX: Solid/liquid, Liquid/liquid
SUSPENSION/ANTIDECANTATION OF SOLIDS
HEAT TRANSFER

FIXATION OPTIONS:


SQUARED PLATE


FLANGE DIN, ANSI...


LINTERN

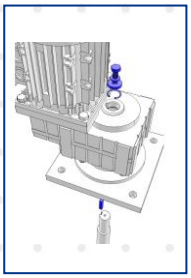
Hollow shaft mounting

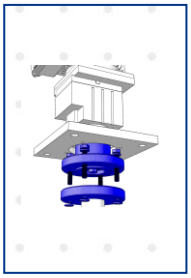
COUPLING

ASSEMBLY OPTIONS:

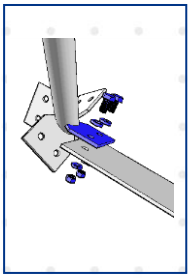
Fixation by lugs

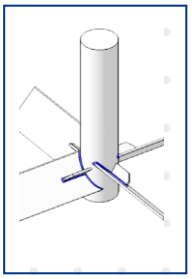
Turbine welded to the shaft

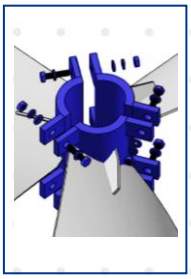
Fixation by removable cores

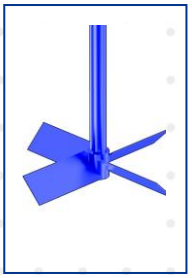
Coated shaft-turbine

www.fluidmix.es
fluidmix@fluidmix.es

Fluidmix S.L. C/ Tineo 17, 28031 Madrid
T. 91 170 19 24 / F. 91 494 24 56

Our Engineering and Development Department is constantly researching and studying the behaviour of fluids inside a vessel using Computational Fluid Dynamics (CFD) simulation software in order to optimise mixing processes.