Serie VPT

FluidMix® Effective Mixing

Tank m³

3 — 50 — 100

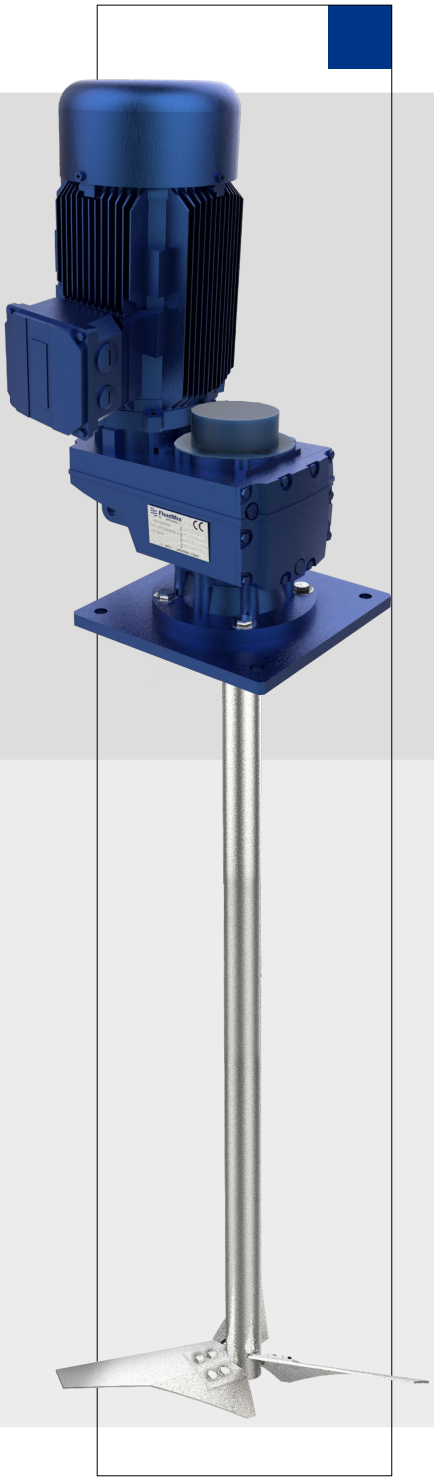

The high efficiency of its propeller rotating at relatively low speeds makes it possible to reduce the power of the motor, the size of the reducer and the manufacturing costs of the rest of the elements that make up the agitator.

Ideal for mixing low-viscosity products in large-volume tanks. In high tanks, several intermediate propellers can be added along the shaft.

- 0,55 Kw a 45 Kw
- 10 – 100 m³
- >800 mm
- 30 rpm 100 rpm 150 rpm
- High effciency
- AISI 316 AISI 304 CARBON STEEL

SECTORS

More common: Minning, Water treatment plants, Chemistry
Other uses: Paper, `painting, petrochemicals

EXTRA OPTIONS:

- Pushing or aspirating flow direction
- Food grade execution, Polishing
- Seal
- Atex

MATERIALS

Hastelloy
Ebonite
AISI 316
AISI 304
Duplex
Super Duplex
Titanium
...

Fluidmix - *Effective Mixing*

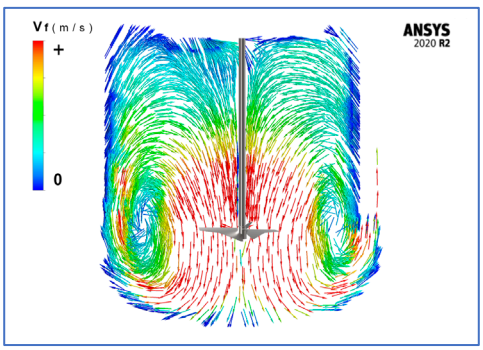

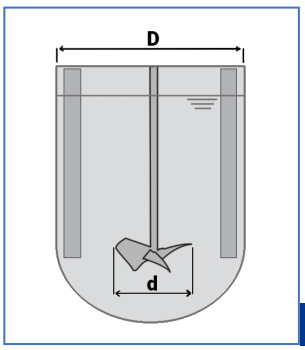

AXIAL FLOW

POSITION:
CENTERED WITH BAFFLES
OFF-CENTERED WITH OUT BAFFLES

RELATION d/D= 0,3-0,5

HIGH SHEAR

ABLE TO WORK WITH EMPTY TANKS

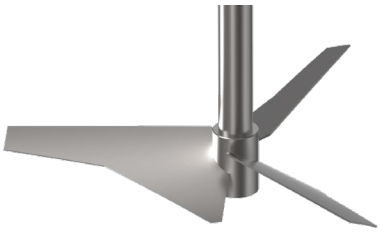

Serie VPT

Find this product at the following linkt to our website:

www.agitadoresfluidmix.com/agitador-industrial-vps/

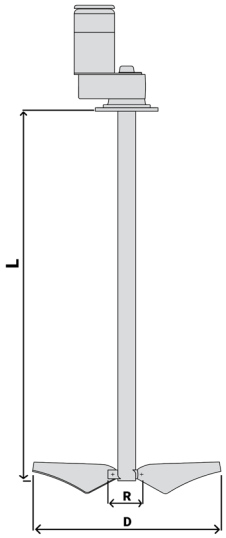

Modelo	Pot. (Kw)	Vel. (rpm)	D (mm)	R (mm)	P (mm)	N (mm)	S (mm)	Peso (Kg)
VPT3-03 14 C 04/26.4	0,37	125	650	280	300	250	16	60
VPT3-06 13 C 07/25.6	1,1	80	980	290	300	250	16	65
VPT3-07 12 C 09/16.6	1,5	60	1350	280	300	250	16	75
VPT3-08 13 C 07/30.6	2,2	90	1000	310	400	350	18	110
VPT3-09 12 C 08/34.6	3	75	1200	340	520	460	24	125

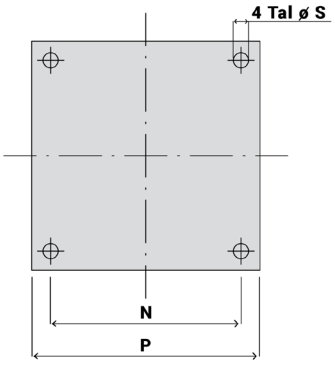

APPLICATIONS

MIX: Solid/liquid, Liquid/liquid
SUSPENSION/ANTIDECANTATION OF SOLIDS
HEAT TRANSFER

FIXATION OPTIONS:

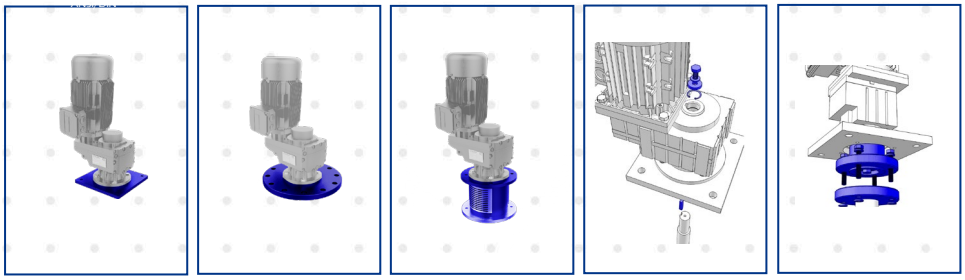

SQUARED PLATE | *FLANGE DIN/ANSI* | *LINTERN* | *Hollow shaft mounting* | *COUPLING*

ASSEMBLY OPTIONS:

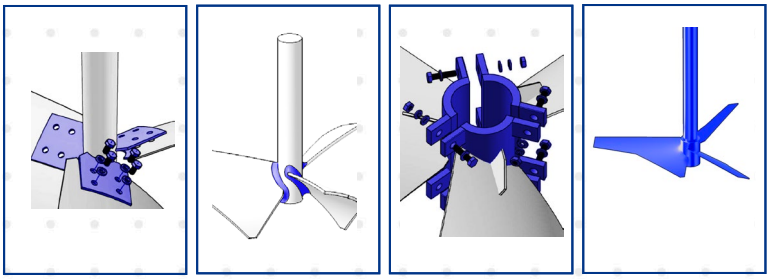

Impeller mounting with lugs | *Impeller welded to the shaft* | *Mounting by removable cores* | *Coated impeller*

www.fluidmix.es
fluidmix@fluidmix.es

Fluidmix S.L. C/ Tineo 17, 28031 Madrid
T. 91 170 19 24 / F. 91 494 24 56

Our Engineering and Development Department is constantly researching and studying the behaviour of fluids inside a vessel using Computational Fluid Dynamics (CFD) simulation software in order to optimise mixing processes.