Serie VPS

FluidMix® Effective Mixing

Tank m³

3 — 50 — 100

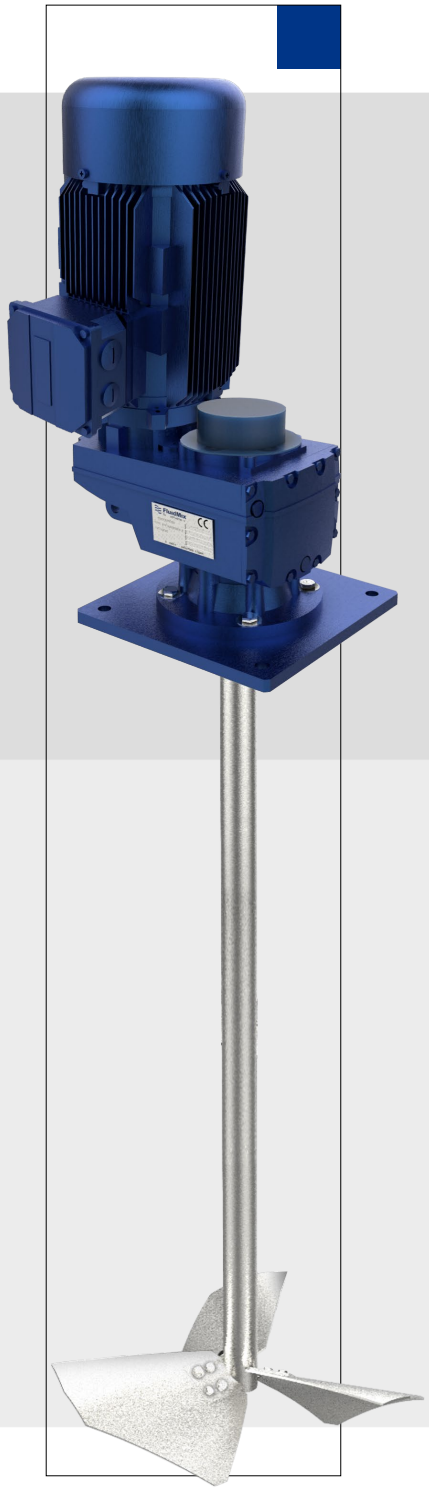

Axial flow impeller mixer with high pumping capacity at low rotational speeds.

The high efficiency of its propeller, rotating at a given rotational speed, generates high flow velocities, making it the ideal solution for keeping solids in suspension.

- 2,2 Kw a 75 Kw
- 10-100 m³
- > 800 mm
- 30 rpm 100 rpm 150 rpm
- High efficiency
- AISI 316 AISI 304 CARBON STEEL

SECTORS

More common: Mining, Water treatment plants, Chemistry
Other uses: Paper, painting, petrochemicals

EXTRA OPTIONS:

- Pushing or aspirating flow direction
- Food grade execution, Polishing
- Seal
- Atex

MATERIALS

Hastelloy
Ebonite
AISI 316
AISI 304
Duplex
Super duplex
...

Fluidmix - *Effective Mixing*

AXIAL FLOW

POSITION:
CENTERED WITH BAFFLES
OFF-CENTERED WITH OUT BAFFLES

RELATION d/D= 0,3-0,5

HIGH SHEAR

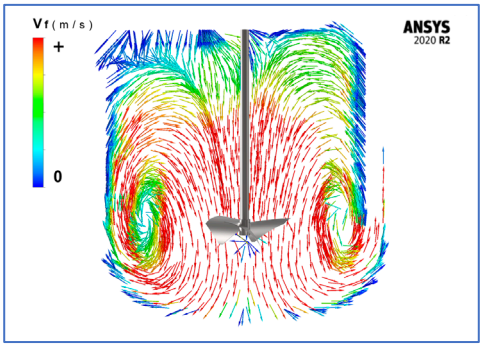

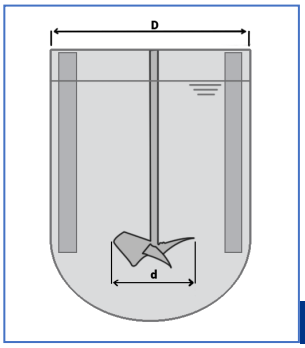

ABLE TO WORK WITH EMPTY TANKS

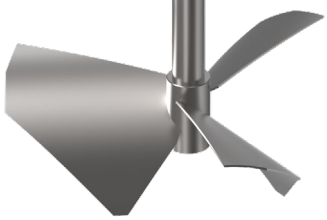

Serie VPS

Find this product at the following linkt to our website:

www.agitadoresfluidmix.com/agitador-industrial-vps/

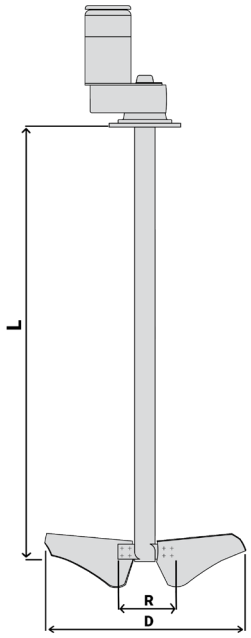

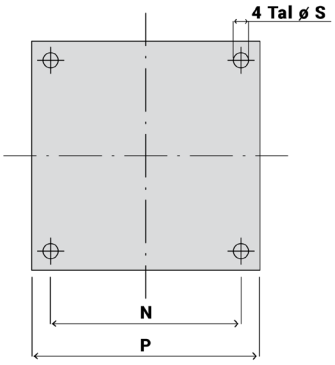

Model	Pow. (Kw)	Speed (rpm)	D (mm)	R (mm)	P (mm)	N (mm)	S (mm)	Weigth (Kg)
VPS3-02 13 C 01/15.6	0,25	100	400	200	280	230	16	45
VPS3-03 12 C 03/15.6	0,37	75	550	280	300	250	16	50
VPS3-04 13 C 03/20.6	0,55	85	600	280	300	250	16	75
VPS3-06 12 C 05/30.6	1,1	70	800	310	400	350	18	110
VPS3-08 12 C 07/30.6	2,2	60	950	310	400	350	18	150
VPS3-10 12 C 07/30.6	4	55	1000	340	520	460	24	220
VPS3-13 13 C 07 30.6	11	80	1000	410	620	560	26	350

APPLICATIONS

MIX: Solid/liquid, Liquid/liquid
SUSPENSION/ANTIDECANTATION OF SOLIDS
HEAT TRANSFER

FIXATION OPTIONS:


SQUARED PLAE


FLANGE AISI/DIN

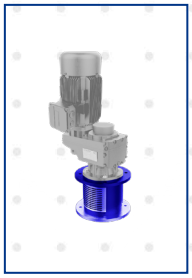
LINTERN

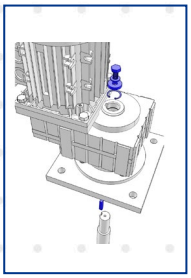
Hollow shaft mounting

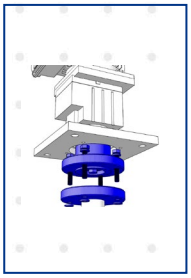
COUPLING

ASSEMBLY OPTIONS:

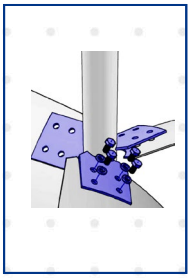
Impeller mounting with lugs

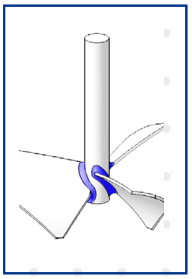
Impeller welded to the shaft

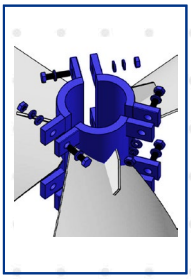
Impeller mounting with lugs

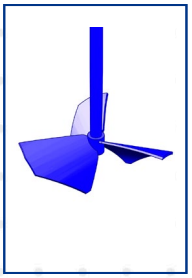
Coated shaft-impeller

www.fluidmix.es
fluidmix@fluidmix.es

Fluidmix S.L. C/ Tineo 17, 28031 Madrid
T. 91 170 19 24 / F. 91 494 24 56

Our Engineering and Development Department is constantly researching and studying the behaviour of fluids inside a vessel using Computational Fluid Dynamics (CFD) simulation software in order to optimise mixing processes.