PCM HYGIENIC SOLUTIONS



HYGIENIC PUMPS AND SYSTEMS CATALOGUE

2026

www.**pcmpumps.com**
www.**pcm-systems.com**

PCM | keep it moving



FLUID HANDLING EXPERT IN THE FOOD INDUSTRY

PCM is a leading manufacturer of pumping, dosing, mixing and filling systems for the food industry.

END-TO-END PRODUCT INTEGRITY

Today's high quality foodstuffs are made with highly expensive ingredients. And the market trend is towards more recognisable processed foods with whole vegetables and fruits. Our systems enable you to handle - transfer, dose, mix and fill - challenging ingredients with minimal damage.

LOW LIFE CYCLE COST

A pump that is not well adapted to its operational parameters can cost you money in terms of production, maintenance downtime and energy consumption. We use Life Cycle Cost (LCC) analysis to find the most cost-effective pumping solutions for your food handling processes.

PERFORMANCE YOU CAN COUNT ON

Reliability and productivity are your best allies in facing the non-stop nature of today's just-in-time retail supply chain. PCM pumping, dosing, mixing and filling systems enable you to produce the same recipe identically from the start of your production run until the finish and ensure repeatability.

MEETING THE STRICTEST STANDARDS

We share your commitment to ensuring customer safety. To begin with, all our systems are CIP (Cleanable In Place). In addition, we continually invest in innovations that enable you to anticipate constantly evolving food safety regulations. Finally, our vast international experience enables us to design systems that meet both local regulations and international standards.

OUR MARKETS



1930
René Moineau invents the Progressing Cavity Pump (PCP).



1932
René Moineau, in partnership with Robert Bienaimé, founded PCM Pompes

1970
PCM invests beyond the Progressing Cavity Pump and adds Delasco™ and Precipompes™ to its product range.



1990
PCM acquires Dosys™ technology and develops its range of systems

2009
PCM introduces the Dosymix™, a dynamic inline mixer. The 3-A symbol certifies compliance with the hygienic standards published by 3-A SSI, from material selection through equipment design.



2012
PCM launches two new products in the food market: the EcoMoineau™ C PCP and the HyCare™ hygienic PCP.





2015
Dosys™ pump (DACC) acquires 3A certification.



2018
PCM launches its PCM Dosymix™ mixer with buffer hopper

2019
PCM introduces the Easyfeed pump for the transfer of viscous and heterogeneous products.





2020
PCM improves its Delasco™ pump range and launches the Delasco™ DX, with improved performance and reduced maintenance costs.

2022
The PCM Hyfeed pump is now on the market for even more hygienic performance.



FOOD CONTACT AND HYGIENIC DESIGN

It is important to understand the difference between these two concepts, both of which are involved in controlling food safety.

FOOD CONTACT

Compliance with **European Regulation EC 1935/2004 ensures the suitability of materials for food contact applications as well as the traceability of equipment within the European Union.** Compliance with FDA requirements **ensures the suitability of materials for food contact applications in the United States.**

These requirements certify that, under normal and foreseeable conditions of use, such materials do not transfer substances to food in quantities that could : pose a risk to human health, cause an unacceptable change in the composition of the food, or adversely affect its organoleptic characteristics (taste, odor, appearance, or texture).

HYGIENIC DESIGN

EHEDG publishes guidelines for hygienic design and cleanability, covering everything from materials and equipment to complete processing plants. T**he 3-A symbol certifies compliance with the hygienic standards issued by 3-A SSI,** from material selection through to equipment design.

Their recommendations aim to eliminate all retention areas that could promote bacterial or microbial growth and focus in particular on: equipment geometry, surface roughness, manufacturing methods (welding, etc.).

Both organizations share a common objective: preventing food contamination throughout the entire manufacturing process, thereby ensuring the highest standards of food safety.

CFD TO PROMOTE HYGIENE

The use of CFD (Computational Fluid Dynamics) nowadays is a very powerful and robust tool to model phenomena related to fluids.

Numerical simulations, carried out in the PCM R&D department, allow computing the flow field through the volumetric pumps manufactured by PCM. These calculations have allowed PCM to optimise the internal design of pumps and **improve the cleaning in place effect**. This result was obtained by increasing the speed of the cleaning fluid and by studying the turbulences in the most difficult areas to clean.



Cleaning-in-place (CIP) fluid speeds modelling in the body of the HyCare™ pump using CFD.



TABLE OF CONTENTS

PCM TECHNOLOGIES 6

- PCM Moineau™ progressing cavity pumps 6
- PCM Dosys™ piston and valve pumps 7
- PCM Delasco™ peristaltic pumps 8
- PCM Lagoa/MDS diaphragm dosing pumps 9

PCM FOOD OFFER 10

Transfer 16
- PCM HyCare™ 18
- PCM EcoMoineau™ C 22
- PCM EcoMoineau™ C with floating stator 26
- PCM EasyFeed 28
- PCM Hyfeed 32
- PCM Delasco™ DX 36
- PCM Dosydrum 40

Injection and dosing 42
- PCM Dosys™ 46
- PCM Dosyfruit™ Premium 50
- PCM Dosyfruit™ Basic 51
- PCM Hopper Station 52
- PCM Dosing Unit 53
- PCM Additive Station 54
- PCM Lagoa 55

Mixing 56
- PCM Dosymix™ 58
- PCM Dosymix™ with buffer hopper 62
- PCM Dostam 64

Filling 68
- PCM Dosyfill 70
- PCM Additivefill 72

Stuffing 74
- PCM Dosyfeed & PCM Additivefeed 76

Topping 78
- PCM Dosytop 80

Combination / multi-functions 82

PCM SERVICES 84

PCM MOINEAU™ TECHNOLOGY
Progressing cavity pumps

From the name of the inventor and PCM co-founder: René Moineau

MOINEAU™ TECHNOLOGY PRINCIPLE

A Moineau™ pump consists of a helical rotor turning in a helical stator. When the rotor turns inside the stator, the honeycomb progresses spirally along the axis of the pump without changing either shape or volume. This action transfers the product from the pump suction to the pump discharge without degrading the product.



BENEFITS

- Preserves the texture of fragile fluids (no shearing compared with lobe or ECP technologies)
- Handles fluids with solids
- High suction capability
- Self-priming (negative head compatible)
- Constant non-pulsating flow
- Reversible

MAIN APPLICATIONS

- Transfer of fragile and/or viscous liquid products
- Dosing of fragile and/or viscous liquid products

GEOMETRIES

Depending on the product being pumped and the conditions of use, PCM selects the pump with the stator profile best suited to the user's needs.
PCM offers the following geometries on its stators, whose elastomer are developed and moulded in PCM's Champtocé-sur-Loire factory, France.



SHORT PITCH



LONG PITCH



CONSTANT THICKNESS

PCM DOSYS™ TECHNOLOGY
Piston and controlled valve pumps

The keys of a perfect dosing and filling

DOSYS™ TECHNOLOGY PRINCIPLE

Dosys™ pump technology sits at the heart of all PCM systems. Invented by PCM, it makes it feasible to replace wasteful systems with highly accurate and efficient inline injection.

Dosys™ pump automatically synchronises dosing volumes with the filling station for optimal performance. It also meters the ingredients with precision, thanks to servo-driven piston and a patented flow-control valve. Dosys™ pumps are designed to handle liquids, semi-solids and viscous products without degrading their texture.

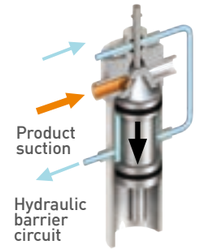

INTAKE

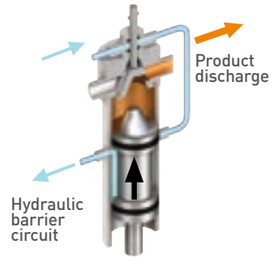

DISCHARGE

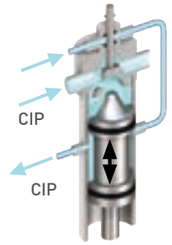

CLEANING IN PLACE (CIP)

BENEFITS

- It meters the ingredients with precision (repeatability: 0.5%)
- Dosys™ pumps handle ingredients with large semi-solids (up to 48 mm / 1.89 inch.) without damaging them
- Because there is no rotating movement, solids remain suspended in the liquid medium; no emulsion or aeration is created
- Dosys™ pumps can be cleaned in place (CIP/SIP)

MAIN APPLICATIONS

- Inline injection of ingredients
- Filling of various ingredients in any type of container
- Dosing for heterogeneous and/or viscous ingredient stuffing

PCM DELASCO™ TECHNOLOGY
Peristaltic pumps

The ideal choice to reduce maintenance costs

DELASCO™ TECHNOLOGY PRINCIPLE

The peristaltic pumping principle is based on the capacity of a soft elastomer hose to accept a deformation and subsequently recover its initial shape. Peristaltic pumps are provided with either high or low pressure hoses, covering a wide range of applications which need versatility and flexibility.



BENEFITS

- Only one wear part: the hose
- Seal-less design
- Self-priming
- High suction capacity
- Simplified maintenance
- Low life cycle cost
- No mechanical seals, valves or gaskets

MAIN APPLICATIONS

- Transfer of highly abrasive or corrosive ingredients

PCM LAGOA TECHNOLOGY
Diaphragm and MDS metering pumps (synchronized multi-pumphead)

Accuracy and reliability: ingredients of successful dosing

LAGOA TECHNOLOGY PRINCIPLE

The Lagoa pump is composed of a diaphragm connected to a piston which alternating movement successively fills and empties the pumphead.

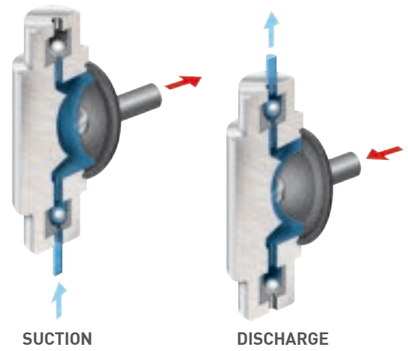

MDS TECHNOLOGY PRINCIPLE

The MDS dosing units consist of several membrane dosing heads.

The dosing heads are equipped with needle valves at the inlet and ball valves at the outlet.
Each diaphragm stroke is adjusted by a micrometer screw allowing a customized dosage. A rotary cylinder drives shafts which are fixed so that the diaphragms move synchronously.

BENEFITS

- Reliability of metering
- Simplified maintenance
- Dry-running
- Simple and robust



Synchronized multi-pumphead (MDS)

MAIN APPLICATIONS

- Dosing of liquid products (additives, colourings,...)
- Dosing of cleaning products (acid, soda, detergents, ...)
- Synchronized multi-dosing of flavours in pots (sirup, fruit flavour, ...)
- Synchronized multi-dosing of liquid ingredients for various preparation feeding

A PCM SOLUTION

all along your manufacturing process





2 Injection-Dosing

Never waste a drop

Dosing of valuable ingredients requires accuracy and flexibility.

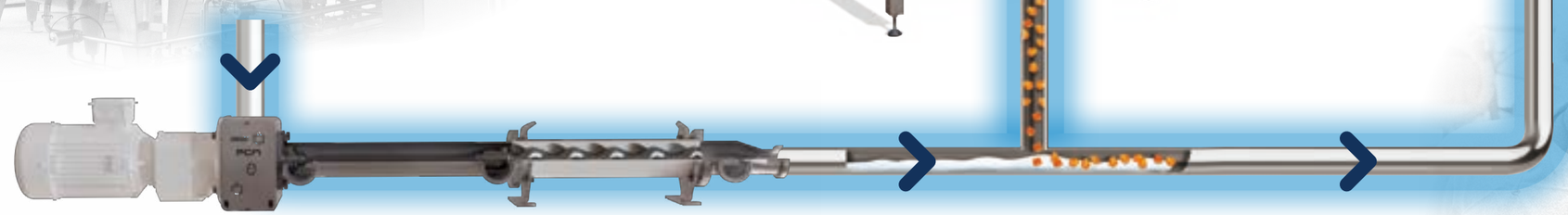

HyCare™

3 Mixing

Mix with care

We make the impossible possible: mixing ingredients without altering the texture.



1 Transfer

Protect valuable ingredients

Although product integrity is a concern at every step of food processing, the risk of damage is highest during the transfer stage.

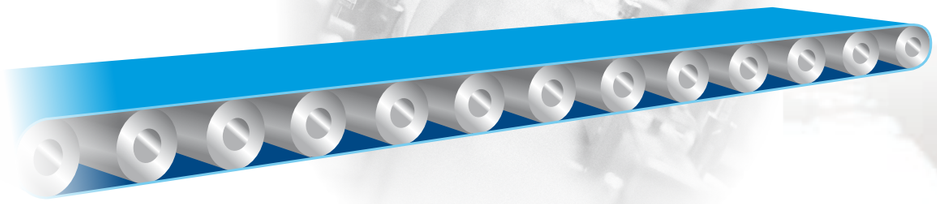

4 Filling-Stuffing-Topping

Freedom to be creative

Breathe new life into your existing products and production facilities.

A PCM SOLUTION

all along your manufacturing process

RAW INGREDIENT TRANSFER

RECIPE PROCESSING

FINAL PROCESSING

TRANSFER

FRAGILE PRODUCTS



- Hygienic progressing cavity pump **PCM HyCare™** (p.18)
- Progressing cavity pump **PCM EcoMoineau™ C** (p.22)

VISCOUS PRODUCTS

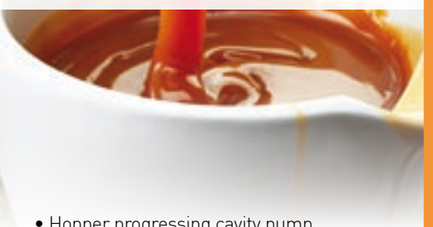

- Hopper progressing cavity pump **PCM EasyFeed** (p.28) **PCM HyFeed** (p.32) **PCM Dosydrum** (p.40)

ABRASIVE PRODUCTS



- Peristaltic pump **PCM Delasco™ DX Series** (p.36)

INJECTION / DOSING

HETEROGENEOUS PRODUCTS WITH VACUUM SUCTION



- Multi ingredients dosing system **PCM Dosyfruit™** (p.50) **PCM Dosing Unit** (p.53)



BIB or tank

HETEROGENEOUS PRODUCTS WITHOUT VACUUM SUCTION

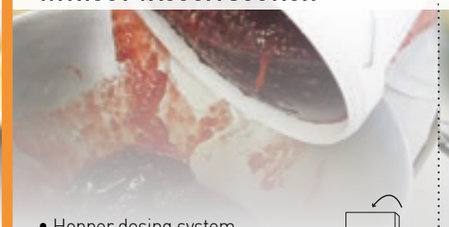

- Hopper dosing system **PCM Hopper station** (p.52) **PCM Dosing Unit** (p.53)



Bulk

LIQUID PRODUCTS - AROMAS AND ADDITIVES



- Additive dosing system **PCM Additive station** (p.54)

MIXING

HETEROGENEOUS AND/OR FRAGILE PRODUCTS



- Inline dynamic mixer **PCM Dosymix™** (p.58)

LIQUID HOMOGENEOUS PRODUCTS WITHOUT PARTICLES



- Inline static mixer **PCM Dostam** (p.64)

FILLING

DIVERSE PRODUCTS ALL PACKAGING



- Filling system **PCM Dosyfill** (p.70)

LIQUID PRODUCTS SMALL DOSES ALL PACKAGING



- Filling system **PCM Additivefill** (p.70)

STUFFING

HETEROGENEOUS OR VISCOUS PRODUCTS



- Needle piercing system **PCM Dosyfeed** (p.76)

LIQUID PRODUCTS

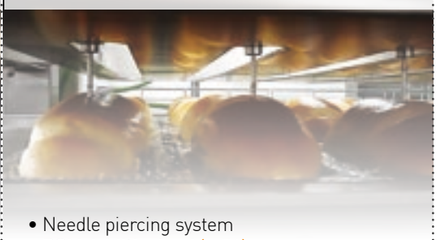

- Needle piercing system **PCM Additivefeed** (p.76)

TOPPING

VISCOUS PRODUCTS



- Topping system **PCM Dosytop** (p.80)

CHOOSE YOUR APPLICATION AND BUILD YOUR OWN!

PCM can combine systems to offer unique solutions customized to meet your process objectives and remove any constraints.

Examples:

- Stirred fruits yoghurts: PCM HyCare™ + PCM Dosyfruit™ + PCM Dosymix™ + PCM Dosyfill
- Vanilla set yoghurts: PCM HyCare™ + PCM Additive station + PCM Dostam + PCM Dosyfill
- Caramel stuffed rolls: PCM Dosing Unit + PCM Dosyfeed multi-heads

A PCM SOLUTION

all along your manufacturing process



› DAIRY



› MEAT, FISH, PETFOOD



› BAKERY



› SUGAR & STARCHES

	DAIRY	MEAT, FISH, PETFOOD	BAKERY	SUGAR & STARCHES
TRANSFER	Various white mass, Cream, Matured milk, Curd, Butter, Melted cheese, Ricotta cheese	Mechanically separated meat (MSM), Blood, Animal fat, Offals / carcass, Gelatin, Liquid eggs, by-products (ground meat)	Liquid batter, Batter/ premix, Cream, Liquid eggs	Molasses, Beetroot pulp or juice,Chocolate, Honey, Caramel, By-products
INJECTION DOSING	Liquid aromas,Fruits preparation, Rennet and liquid ferments, Vitamins, Probiotics	Blood, Animal fat, Colourings, Liquid antioxidant, Fish oil, Gelatin	Water, Liquid aromas or colourings, Alcohol, liquor, Liquid eggs, Cream, Chocolate, Jam	Liquid aromas or colourings, Sugar syrup, Lecithin (for chewing gum), Glycerin, PGPR*, Gelatin
MIXING	Stirred fruit yoghurt, Aroma for flavoured milk + liquid starch (1 ingredient of transfer + 1 injection ingredient)	Meat preparation + colours, Petfood + antioxidant (1 ingredient of transfer + 1 injection ingredient)	Liquid batter + cream (1 ingredient of transfer + 1 injection ingredient)	Marshmallows + colourings, Chocolate + liquor (1 ingredient of transfer + 1 injection ingredient)
FILLING	All types of yogurts, Dessert Creams, Bottom layer in cup (multilayer), Cream in 10L bucket, Co-dosing (2 products side by side in a single cup), Rennet in the bottom of cups	Minced meat in bag, Terrines, Lard in pots, Multilayered fish terrines	Cake batter in baking molds	-
STUFFING	-	Gelatin in terrines	Jam in rolls, Aromas in pastries, Chocolate/ caramel in pancakes, Cream in profiteroles	-
TOPPING	Jam on the top of yoghurt	Hot liquid jelly on patties, Lard, Crumb of chicken or tuna in paste on sandwiches	Chocolate, Jam, Caramel, Honey, Cake icing, In line topping of custard on pastries	-

* Polyglycerol polyricinoleate



› CONVENIENCE FOOD



› FRUITS & VEGETABLES



› COSMETICS



› DRINKS

	CONVENIENCE FOOD	FRUITS & VEGETABLES	COSMETICS	DRINKS
TRANSFER	Preparation in sauce, mashed potatoes Vegetables, Oils, Mustard, Ketchup, Mayonnaise	Compote, Jam, Concentrated tomatoes, bunch of grapes raisin, Almond paste, Alginate,Pea fiber, By-products (peelings)	Mascara, Shampoo, Toothpaste, Thermal clay sludges	Fruit juice, Concentrated fruit or vegetables juice, Fermented must , Wine
INJECTION DOSING	Sauce, Cream, Liquid aromas	Liquid sugar, Pectin, Lemon juice, Liquid colourings, probiotics	Vitamins, Oil, Water, Liquid aromas	Gum arabic, Syrup, Liquid aromas or colourings, ferments, Alginate balls
MIXING	Vinaigrette Mayonnaise base + starch, Ketchup + pickles	Spinach + cream (1 ingredient of transfer + 1 injection ingredient)	Shower gel + purified water (1 ingredient of transfer + 1 injection ingredient)	Clear wine + sugar musts, water + syrup (1 ingredient of transfer + 1 injection ingredient)
FILLING	Ready made meals, Lasagnas in a tray, vegetables in sauce, Soups, Sauces (Individual or in pouches), Mayonnaise, Baby food (steamed process)	Apple sauce in cup Canned fruit salad , Peach quarters in syrup in 3L can, Baked beans in can	Lotions (little bottles), Gel, Toothpaste (tube), Clay in tube or bucket, Peeling, Cosmetic cream, Lipstick	-
STUFFING	Gelatin in terrines	-	-	-
TOPPING	Cream, Coulis,Cornish pasties, Vinaigrette on salad, Various sauces (bolognaise, béchamel)	-	Self-tanning topping on gloves, Wipe topping with lotion cleansing	-



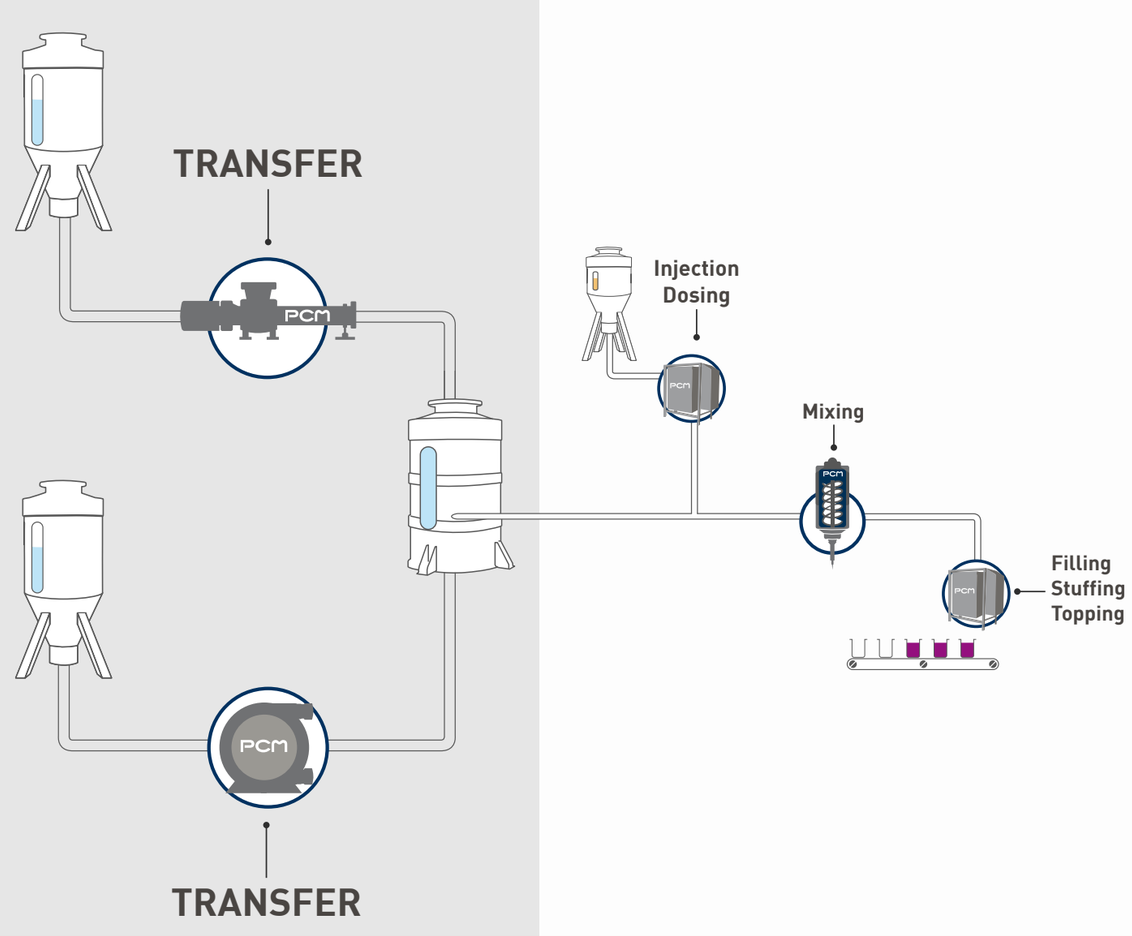

TRANSFER

Protect valuable ingredients: no ingredient is too complex

PCM transfer solutions are the ideal choice for pumping a wide range of ingredients from thin liquids to highly viscous pastes and sauces, at cold and hot temperatures. These ingredients can be sticky, slippery or contain solids (including large chunks and soft pieces such as chopped vegetables and whole fruits). PCM transfer pumps and systems are also recommended for applications that require pressure variations, depression and viscosity variations.

The choice of the technology will depend on the application and its requirements.

PCM Moineau™ progressing cavity pumps range:

- PCM HyCare™
- PCM EcoMoineau™ C
- PCM EasyFeed & HyFeed

PCM Delasco™ peristaltic pumps range:

- PCM Delasco™ DX

PCM MOINEAU™ PROGRESSING CAVITY PUMP

Respect the texture of fragile fluids

When you handle fragile products, the risk to the quality and texture of ingredients is highest during this transfer stage and depends partly on the pump technology used.
With Moineau™ technology, PCM is committed to handle your ingredients with the highest level of care, ensuring preservation of the texture of your products thanks to a controlled and minimum slip rate.

PCM DELASCO™ PERISTALTIC PUMPS

Handle abrasive and corrosive fluids

With only one item in contact with the pumped product and low operating speed, peristaltic pumps are ideal for transferring very abrasive and/or corrosive fluids (musts, ground meat juices with bone fragments...). They are also able to transfer hard or soft pieces without causing any damage (e.g. peach transfer).
Furthermore, PCM Delasco™ peristaltic pumps can easily be integrated in specific industrial processes as occasional dry running is possible without damage occurring.



PCM HYCARE™

The benchmark pump for applications where hygiene requirements are critical

PCM HyCare™ Conventional Stator - 40HY12



PCM HyCare™ Constant-Thickness Stator - 40HY24CT



The PCM HyCare™ pump complies **with FDA (USA) requirements and EC Regulation 1935/2004 (European Union)**, ensuring material suitability for food contact applications and full equipment traceability.

It **follows the recommendations of the EHEDG guidelines and complies with the hygienic standards published by 3-A SSI**, making it a benchmark in the hygienic progressive cavity pump market.

PCM HyCare™ technology provides the assurance of outstanding hygiene and food safety performance.

In addition, the PCM HyCare™ pump now incorporates a **constant-thickness stator.** Unlike conventional designs, the elastomer thickness remains uniform throughout the entire profile, ensuring optimized mechanical and hydraulic efficiency.

TECHNICAL PERFORMANCE

- **Pressure:** 16 bar [232 Psi]
- **Flowrate:** 37.5 m^3/h [165 USGPM]
- **Particles size:** 32 mm [1.26 inch]

RANGE

- 26 models

EXAMPLES OF APPLICATIONS

Designed for bacteriologically sensitive applications, including:

- Fresh dairy products
- Egg products
- Additives (cultures, rennet, flavorings, colorants, oils, etc.)

CFD-VALIDATED DESIGN

To optimize cleanability, the design of the PCM HyCare™ pump has been validated using Computational Fluid Dynamics (CFD) simulations (see page 4).

PCM HYCARE™ CONSTRUCTION AND BENEFITS

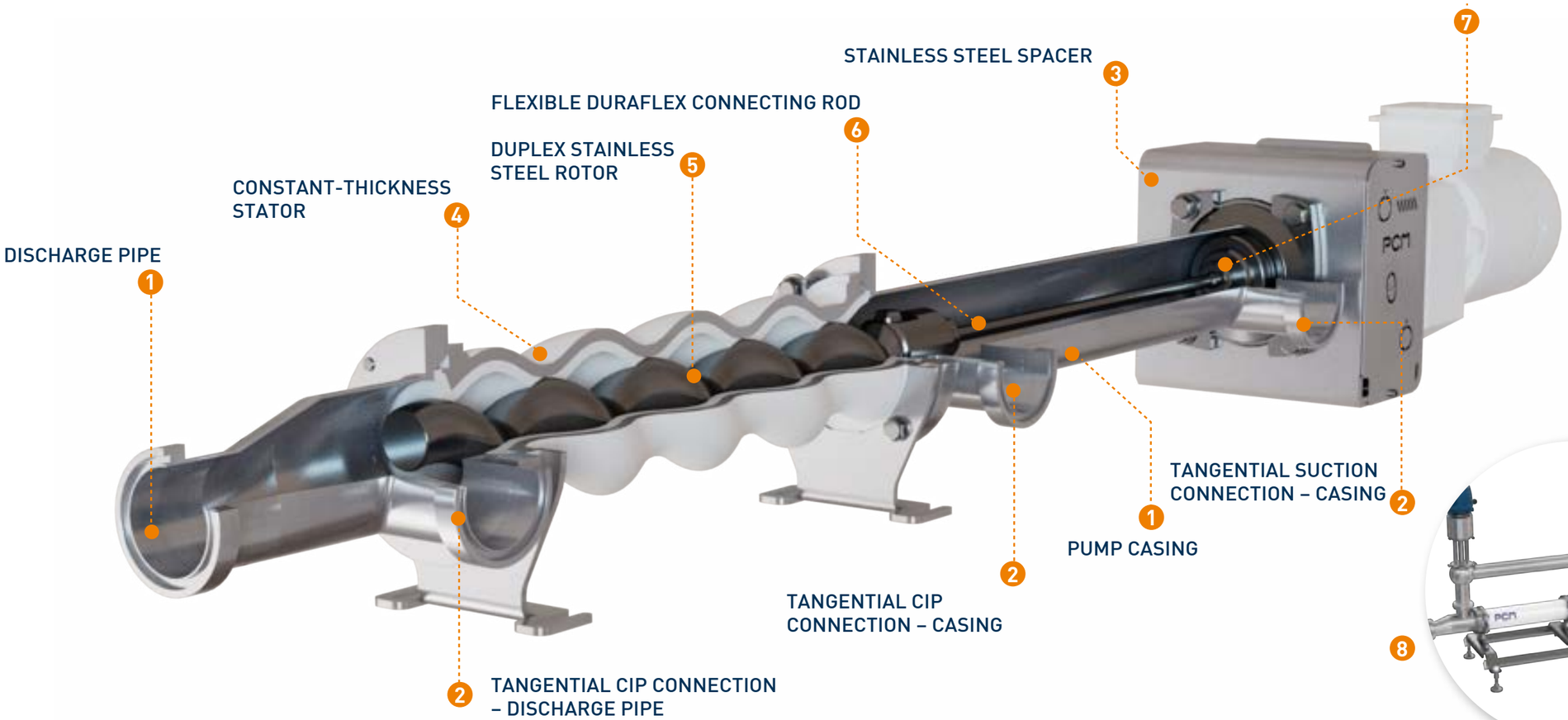

AVAILABLE CONNECTIONS

- SMS
- SMS Clamp (3-A)
- DIN 11851
- DIN 11864-1 Series A, DIN 11864-2 Series A, DIN 11864-3 Series A
- DIN 32676 Series A, DIN 32676 Series B, DIN 32676 Series C (3-A)

CONNECTION ORIENTATION

- Vertical tangential
- Horizontal tangential right*
- Horizontal tangential left*

* Viewed from the pipe side, looking towards the drive unit.

The casing and discharge pipe can also be supplied without CIP connection ports.

MOINEAU™ TECHNOLOGY preserves the texture of your product (see page 6).

1 OPTIMIZED CASING AND DISCHARGE PIPE DESIGN

- Tangential connections improve cleaning efficiency by increasing internal flow velocity and creating a vortex effect.

2 TANGENTIAL CONNECTIONS

- The pump is designed for Clean-in-Place (CIP) operation without dismantling.
- All connections are positioned tangentially: Suction connection on the casing, CIP connection on the casing, CIP connection on the discharge pipe.

3 STAINLESS STEEL SPACER.

- Supplied as standard for long-term durability and reliability.

4 CONSTANT-THICKNESS STATOR

- Delivers up to twice the pressure per stage.
- Makes the pump more compact while reducing rotor and stator weight.
- Enables restart after CIP up to twice as fast.
- The integrated anti-rotation system prevents accidental stator rotation in the event of overpressure or high temperatures (over-tightening).

5 DUPLEX STAINLESS STEEL ROTOR (AISI 329 LN)

- Excellent resistance to corrosion and abrasion.

6 FLEXIBLE **DURAFLEX** CONNECTING ROD

Titanium construction:

- Proven quality and reliability.
- 3-year warranty*.
- Reduced footprint thanks to the flexibility of the connecting rod.

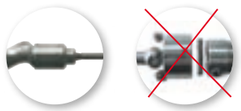

Single-piece design:

- No retention areas, unlike open joints or conventional grease-lubricated and sleeved cardan joints.
- The absence of cardan joints eliminates any risk of metal particle or grease contamination of the pumped product.

Bielle DURAFLEX Garantie 3 ans



7 HYGIENIC MECHANICAL SEAL

- Positioned below the CIP inlet to facilitate cleaning.
- Cartridge design without screws or springs (no retention areas).
- Quick replacement from the rear without adjustment or shimming.

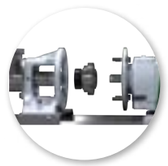

8 STAINLESS STEEL BASEPLATE WITH ADJUSTABLE FEET

- Adjustable from 20 mm to 50 mm (0,78 in. to 1,9 in.), depending on the model.

* The warranty is 3 years under normal conditions of use: within the limit of 10 000 operating hours, at a speed between 80 and 280 rpm, in compliance with the PCM CIP guidelines.



PCM ECOMOINEAU™ C

The shortest progressing cavity pump in the market



Its revolutionary design combines the legendary performance and reliability of **PCM Progressing Cavity Pump technology** with a highly modular, eco-friendly design. The EcoMoineau™ C pump requires less space for installation which reduces costs and makes it easy to integrate into your system (or process).

The EcoMoineau™ C pump is **shorter** and **uses 10% less power** than most progressing cavity pumps on the market.

The energy used to manufacture, transport and operate the EcoMoineau™ C pump is therefore optimised.

This PCP is made with fewer parts compared to competitors models. This new stainless steel pump has **many design features** that makes **installation, operation and servicing easier than ever before**.

TECHNICAL PERFORMANCE

- **Pressure:** 48 bar [696 Psi]
- **Flowrate:** 500 m³/h [2201 USGPM]
- **Particles size:** 32 mm [1.26 inch.]

RANGE

- 26 models

EXAMPLES OF APPLICATIONS

Recommended for non microbiologically sensitive food applications:

- Fruits and vegetables (soup, sauce, jam, puree...)
- Beverages (fruit juice, thick juice, wine, additives,...)
- Glucose, syrups, massecuite, molasses
- Pasteurised preparations
- Grease, oil (colza, olive, ...), enzymes

PUMP CONSTRUCTION

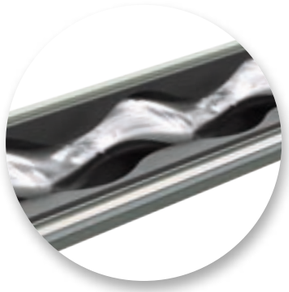

1 HIGH PERFORMANCE AND QUALITY ELASTOMERS DEVELOPED IN OUR STATE-OF-THE-ART LABORATORY



3 RINSING PORT

2 PATENTED CONNECTING SYSTEM

4 REVOLUTIONARY JOINT



Pump joint < 90m³/h [395 USGPM]

JOINT ASSEMBLY BENEFITS

- **Cost and inventory savings:** same joint assembly for various models and sizes
- **Maintenance time saving:** Only 3 screws needed to dismantle the joint
- **Patented connecting system**
- **Durable and robust design:** lifespan increase for non corrosive and non abrasive applications

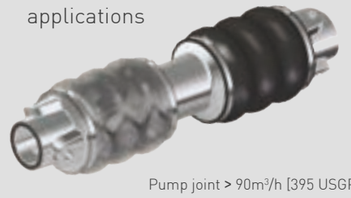

Pump joint > 90m³/h [395 USGPM]

PCM ECOMOINEAU™ C BENEFITS

SPACE SAVING
- Revolutionary joint 80 % shorter
- Revolutionary joint coupling rod length reduced and hardened for long life operation
- Patented connecting system: only 10 cm of clearance required to dismantle the stator

EASY AND QUICK DISMANTLING
- The seal can be changed by simply disconnecting the drive
- The shaft line (rotor, coupling rod, driving shaft) can be removed without disconnecting pipework
- Patented connecting system with 3 screws only

FOOD COMPLIANT
- Food connections and flushing ports
- FDA (USA) requirements and EC Regulation 1935/2004 (European Union) compliant materials
- Single, double and flush mechanical seals

VERSATILE CONSTRUCTION
Integrated construction
- Cost-effective solution includes single bellow mechanical seal (self-positioning)
- Shortest and lightest design

Monobloc and bearing construction
- Five sealing solutions available
- Spacer with improved access to the sealing system
- Rubber deflector: protecting the drive and bearing

ECO-DESIGN PUMP
- 10% less power consumption compared to most Progressing Cavity Pump's on the market
- Less raw materials

PCM ECOMOINEAU™ C WITH FLOATING STATOR

The most compact progressing cavity pump in the market



With a high suction capacity, the PCM EcoMoineau™ C progressing cavity pump with floating stator is ideal for transferring a wide range of viscous and non-viscous food fluids.

Its simplified design and compactness allow for quick and cost-efficient maintenance. The flexibility of the floating stator allows the rotor to rotate eccentrically, as the rotor is directly connected to the drive (no connecting rod). This makes the pump body shorter.

The EcoMoineau™ C with floating stator is ideal for small space requirements.

TECHNICAL PERFORMANCE

- **Pressure:** 4 bar [58 Psi]
- **Flowrate:** 0.010 up to 6.8 m^3/h [0.04 to 29.9 USGPM]
- **Particles size:** 8 mm [0.31 inch.]

RANGE

- 6 models

PUMP CONSTRUCTION

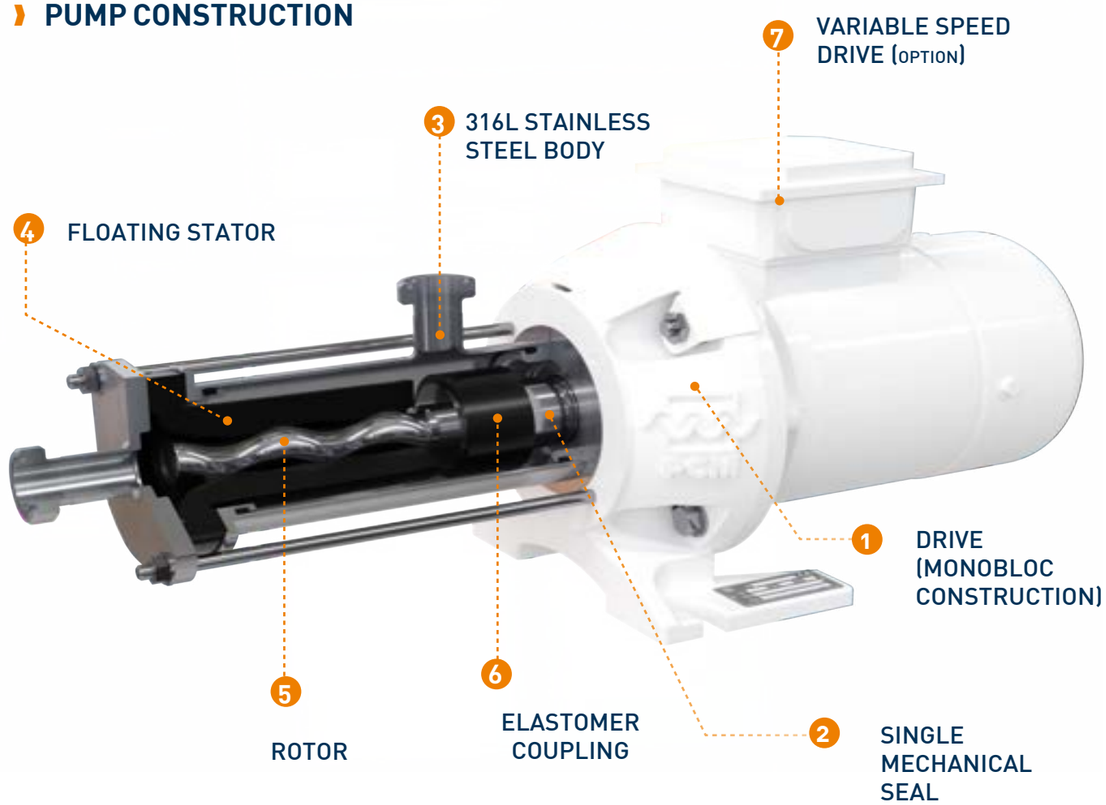

PCM ECOMOINEAU™ C WITH FLOATING STATOR BENEFITS

SPACE SAVING

- Simplified shaftline, made of 316L stainless steel, without articulation or connecting rod
- Compact elastomer coupling: in black nitrile (NBR), compliant with EC Regulation 1935/2004 and FDA requirements. This part provides the connection between the shaftline and the rotor. The coupling flexibility associated with the floating stator flexibility ensures the eccentric movement of the rotor in the stator.

SIMPLIFIED MAINTENANCE

- Shorter body
- Reduced weight
- No connecting rod

VERSATILITY

- Floating stator in black nitrile (NBR) compliant with EC Regulation 1935/2004 and FDA requirements. The principle of the floating stator is more tolerant to dry running. For total protection, it can be equipped with a dry-run protection. Simple and robust stainless steel construction.
- Can be used as a dosing pump, without pulsation
- Ideal for fragile fluids

LOW LIFE CYCLE COSTS

- Simple design
- Cost efficient maintenance
- Reduced weight



PCM EASYFEED

Transfer of viscous and heterogeneous products

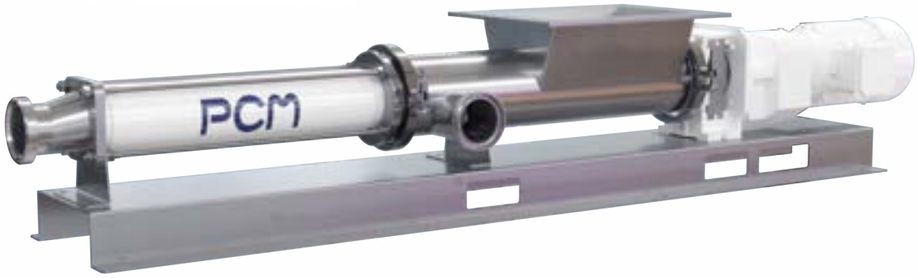

The PCM EasyFeed progressive cavity pump (food grade version) with Moineau™ technology is ideal for transferring highly viscous, heterogeneous with or without particles, pasty or even sticky fluids.

This pump is specially adapted to the meat and the fruit & vegetable markets. It has been designed in compliance with food recommendations and requirements to avoid any retention areas and to facilitate cleaning.

TECHNICAL PERFORMANCE

- **Pressure:** 16 bar [232Psi]
- **Flowrate:** 67,5 m^3/h [297 USGPM]
- **Hopper internal dimensions:** 260 x 150 mm, 350 x 240 mm, 520 x 350 mm
- **Particle size:** max. 40 mm

RANGE

- 6 models

EXAMPLES OF APPLICATIONS

- Mechanically separated meat
- Fish emulsion
- Petfood preparation
- Fruit and vegetables: pea fibers, tomato concentrate, coproducts
- Beet pulp, molasses

PCM EASYFEED PUMP CONSTRUCTION

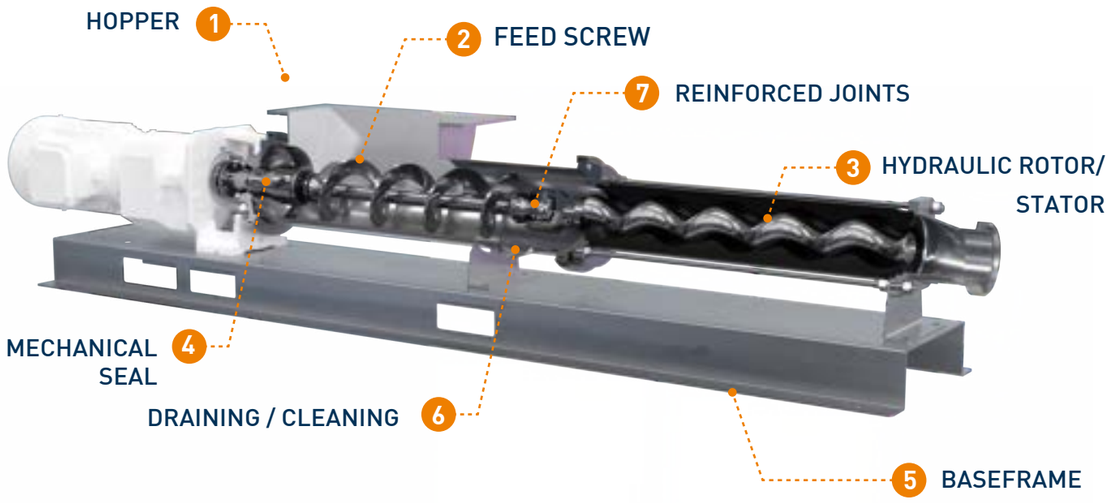

1 HOPPER

- Hopper with inner vertical walls for better fluid flow to the feed screw (design suitable for sticky products)
- 316L stainless steel construction, roughness Ra≤1.6µm, continuous welds according food requirements
- Conical shaped barrel to guide the fluid to the hydraulic (avoids accumulation and retention at the stator inlet)
- Tangential port (right or left side) for easy cleaning and complete body emptying

2 FEED SCREW

- Open-type feeding screw designed to the transfer constraints of sticky products
- Compact and robust joint; strong construction adapted to abrasive fluids

3 HYDRAULIC ROTOR/STATOR

- 329L stainless steel duplex rotor to ensure better abrasion resistance
- Black food grade NBR stator for FDA (USA) requirements and EC Regulation 1935/2004 (European Union) **compliance**
- Moineau™ hydraulic system compatible with EcoMoineau™ C and Hycare™

4 SEALING

- Single mechanical seal with food grade o-rings, suitable for food contact
- Silicon carbide/silicon carbide seal for better abrasion resistance, spring not in contact with the product
- Quench on request (water lubricated or with NSF-H1 food grease in automatic device) for abrasive and/or sweet products

5 BASEFRAME

- 304L stainless steel baseframe, adjustable feet on request

PCM EASYFEED RANGE BENEFITS

VERSATILITY AND ROBUSTNESS

- Transfer of various products: heterogeneous or not, fluid or highly viscous, with or without particles, pasty, sticky, fatty...
- For viscosities up to 80 000cp and dryness levels of 30%
- Small pump footprint and and easy to integrate

DESIGN ENSURING FOOD CONTACT SUITABILITY

- Design avoiding any retention areas
- Parts in contact with the product are food grade certified (seals, elastomers, sheaths...)
- 316L stainless steel parts: external shot peening,internal polishing for a roughness in line with food requirements

SIMPLIFIED MAINTENANCE

- Pump disassembly with clamp collars for immediate access to wear parts and easy clean out of place
- EcoMoineau™ patented rotor coupling system with 3 screws

*except models 3 / 6 / 13EF12

OPTIONS

- SMS/DIN11851/CLAMP fittings available as standard
- Food colorant injection ports (positioned on the feed barrel)
- Frequency inverter to extend the pump's flow range
- Hopper: other sizes available on request
- Stator mounted temperature sensor
- Pressure switch

REINFORCED JOINTS



Compact and robust articulation of smaller models



Articulation with EcoMoineau™ patented rotor coupling system for large displacement models





PCM HYFEED

Transfer of viscous and heterogeneous products

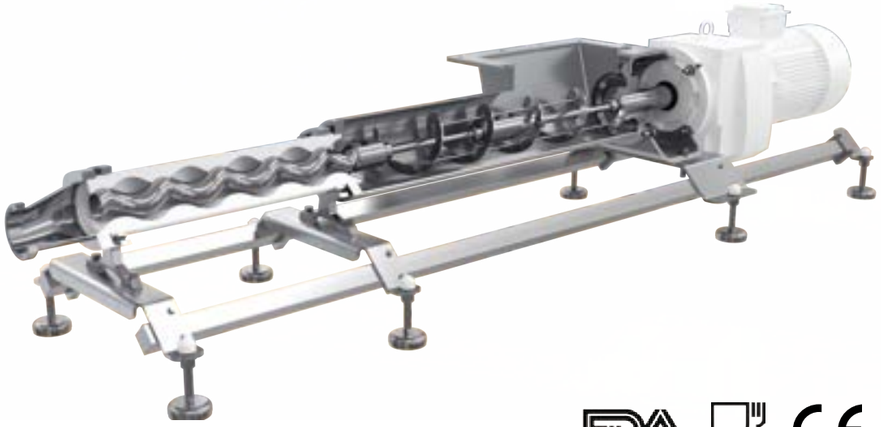

The PCM HyFeed progressive cavity pump with Moineau™ technology is ideal for transferring highly viscous, heterogeneous with or without particles, pasty or even sticky fluids and bacteriologically sensitive.

This pump is specially adapted to fresh food and cosmetics markets, It has been designed in compliance with food recommendations and requirements to avoid any retention areas and to facilitate cleaning.

TECHNICAL PERFORMANCE

- **Pressure :** 16 bar [232 Psi]
- **Flowrate :** 37,5 m3/h [1651 USGPM]
- **Hopper internal dimensions :** 263 x 150 mm, 350 x 240 mm, 518 x 349 mm
- **Particle size :** max. 32 mm

RANGE

- 6 models

EXAMPLES OF APPLICATIONS

- Fruit coulis and purée
- Caramel sauces, chocolate sauces, chestnut purée
- Vegetable purée
- Sauces

Winner of the Hygienic Design Award



PCM HYFEED PUMP CONSTRUCTION

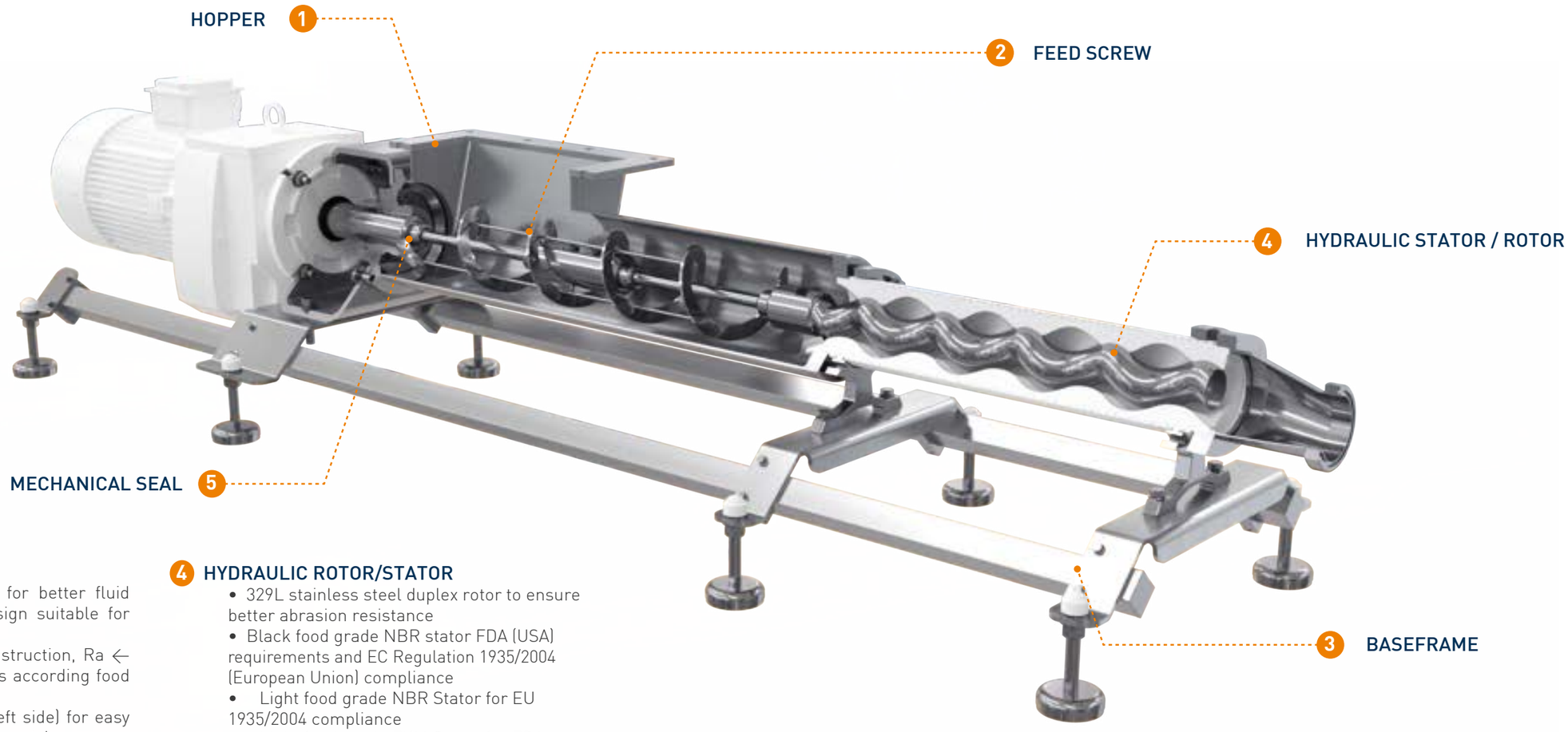

1 HOPPER

- Optimized hopper design for better fluid flow to the feed screw (design suitable for sticky products)
- 316L stainless steel construction, Ra ← 0.8 micron, continuous welds according food requirements
- Tangential port (right or left side) for easy cleaning and complete body emptying
- Optional: Cleaning nozzles (flush-mounted during production – extended during CIP). During CIP, the cleaning pressure extends the self-rotating nozzle into the hopper.

2 PATENTED FEED SCREW

- Open-type feeding screw designed to the transfer sticky products, thus avoiding clogging effect (circulation of the fluid between core and coils)
- Compact and robust transmission; flexible titanium rods without joints (no wear of the joints by mechanical friction, elimination of the risk of lubrication grease release from the cardan shafts or of contamination by stagnation of product in the event of defective or damaged sheaths)

3 BASEFRAME

- 304L stainless steel baseframe with adjustable feet

4 HYDRAULIC ROTOR/STATOR

- 329L stainless steel duplex rotor to ensure better abrasion resistance
- Black food grade NBR stator FDA (USA) requirements and EC Regulation 1935/2004 (European Union) compliance
- Light food grade NBR Stator for EU 1935/2004 compliance
- Light food grade FKM Stator for FDA compliance
- PCM Moineau™ hydraulic system compatible with and PCM Hycare™

5 SEALING

- Single mechanical seal with FDA (USA) requirements and EC Regulation 1935/2004 (European Union) food grade compliant o-rings, suitable for food contact
- Silicon carbide/silicon carbide mechanical seal for better abrasion resistance (no spring in contact with the product)
- Quench on request (water lubricated or with NSF-H1 food grease in automatic device) for abrasive and/or sweet products
- Double mechanical seal on request (water lubricated)

CONSTRUCTION

All structural parts are made of austenitic stainless steel (316L for fluid contact - 304L for structural parts)

PCM HYFEED RANGE BENEFITS

VERSATILITY AND ROBUSTNESS

- Transfer of various products: heterogeneous or not, fluid or highly viscous, with or without particles, pasty, sticky, fatty...
- For viscosities up to 80 000cp
- Small pump footprint and easy to integrate

DESIGN ENSURING FOOD CONTACT SUITABILITY

- Design avoiding retention areas
- Parts in contact with the product are food grade certified (seals, elastomers, ..)
- 316L stainless steel parts: food quality welds, roughness in line with market requirements

SIMPLIFIED MAINTENANCE

- Transmission with flexible titanium rods (without open or covered joints)



PCM DELASCO™ - DX SERIES

Food grade peristaltic pumps



With various pump constructions and a wide choice of elastomer hoses, the PCM Delasco™ range covers a **wide variety of applications** calling for heavy-duty and flexibility.

Simple to use and to maintain, PCM Delasco™ peristaltic pumps can be adapted to multiple **constraint of abrasiveness, corrosiveness and respect for textures.**

Peristaltic pumps with low operating speeds are ideal for **abrasive products**: the transfer is carried out inside the hose without agitating the fluids.

They are also the perfect solution to handle **corrosive products** as only the hose is in contact with the fluid. Pumps also ensure the safe transfer of **fragile products.**

TECHNICAL PERFORMANCES

- **Maximal pressure:** 15 bar [218 Psi]
- **Flowrate:** from 44 l/h to 100 m^3/h [440.2 USGPM]
- **Accessories**: hose-leak detector, vacuum system, integrated frequency inverter

RANGE

- 6 models from the PCM Delasco™ pump DX12 to the PCM Delasco™ pump DX55.

EXAMPLES OF APPLICATIONS

- Convenience food preparations, Fruit pieces
- Food creams (chocolate cream, custard cream...)
- Crushed meat juices containing bone debris
- Slaughterhouse residues in the recovery of by-products
- Clay slurries for the cosmetic industry

PUMP CONSTRUCTION

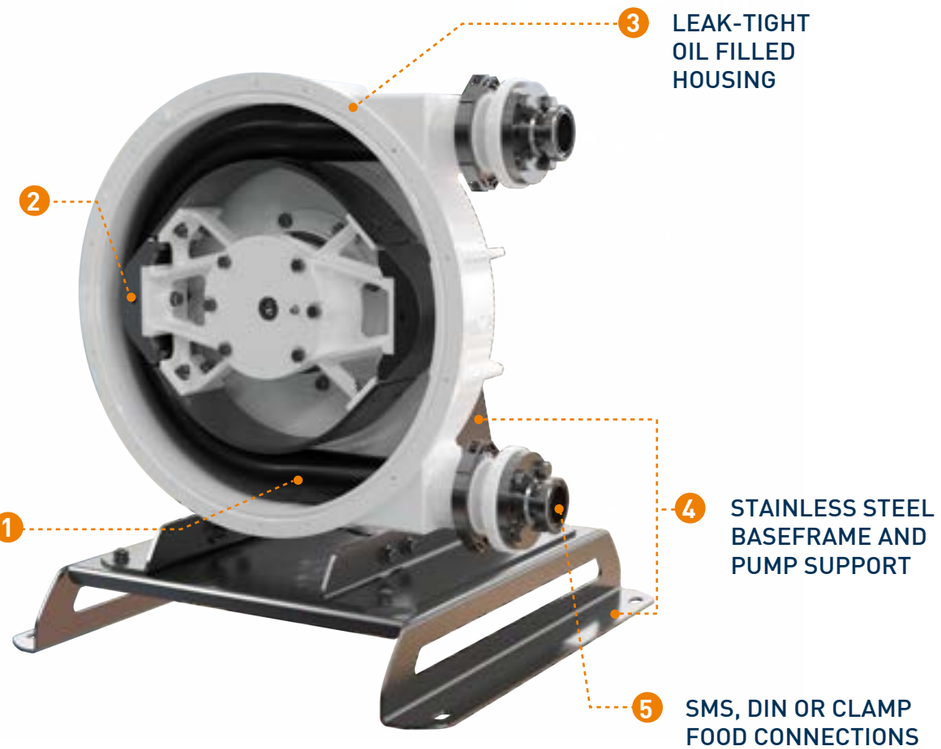



PCM DELASCO™ PUMP RANGE BENEFITS

MULTI FLUIDS HOSE PUMP

- Ideal for abrasive and high solids content slurries (up to 80%), high density, corrosive, shear sensitive, viscous, multiphase, gaseous and crystalizing fluids pumping.

OPTIMISED OPEX

- Only one wearing part: the hose
- Easy on-site maintenance and short downtimes thanks to a unique hose quick release allowing hose change in only a few minutes
- Seal-less design: no expensive sealing to replace and no associated seal-water flushing costs
- Low energy requirements thanks to the inherent low running speed

VERSATILE FOOD HOSE PUMP

- Transfer, dosing and emptying
- High suction lift
- Can run dry without ancillary protection equipment

BLACK FOOD NITRILE HOSES FOR DELASCO™ PUMPS

The hose is made out of black food grade nitrile. For high pressure resistance, its has 4 reinforced layers and its outside cover is made out of natural rubber for the utmost mechanical resistance.



USE:

- Max pressure: 15 bar
- Max temperature: 80°c [176°F]
- Cleanable in place
- Food contact oil

CERTIFICATES:

- CE 1935/2004
- FDA 21 CFR 177.2600



PCM DOSYDRUM

The only hygienic solution on the market which is able to unload/ transfer viscous fluids with or without particles, and cleanable in place without any dismantling.



Production



End of production



Clean In Place

PCM DOSYDRUM also stands out thanks to the Dosys™ technology which offers major advantages versus classic competing solutions.

TECHNICAL PERFORMANCES

- **Maximal pressure :** 9 bar [130 Psi]
- **Flowrate :** 1,5 m^3/h [6 USGPM]
- **Particle size :** 48 mm maxi

RANGE

- 2 models

EXAMPLES OF APPLICATIONS

- Tomato pulp
- Tomato concentrate
- Almond cream
- Coconut cream
- Prepared dishes

BENEFITS OF THE SYSTEM

TRANSFER AND DOSAGE OF VISCOUS PRODUCTS WITH OR WITHOUT PIECES

- Dosys™ technology allows you to have pieces up to 48 mm

HYGIENE

- Cleaning In Place system
- Proven hygienic design on the Food markets
- FDA (USA) requirements and EC Regulation 1935/2004 (European Union) compliance

MINIMIZING YOUR LOSS OF INGREDIENTS

- The design and body of the Dosys pump™ allows the user to recover all product (no dead volume)
- Complete emptying of the vessels thanks to up and down system

MOBILE, COMPACT, AND EASY TO USE

- Low footprint < 1m^2
- Equipped with wheels for mobility around your production floor
- Touch display with built-in automation : simplified management of the operating modes (production/cleaning/ defaults)
- Flexible solution : adaptation to Eurobins, drums, or others vessels
- Increased safety: no moving parts are accessible

BUILDING OF THE SYSTEM

- Dosys™ technology
- DACC feeder with pneumatic actuators
- Suction rod with beveled design to allow passage of particles
- Cleaning in place sleeve for the suction rod
- Built-in CIP centrifugal pump
- Electropneumatic Control Panel
- Stainless steel frame on swivel wheels
- Up and down system by electric cylinder

Options

- Filling nozzles suitable for miscellaneous packaging types
- Scraper Plate equipped with a dedicated Nitrile seal for sticky fluids
- On-request adapting of the scraper plate's shape: Euro bin, bucket, ...
- Selecting the Dosys™ pump model depending on the fluids (particle sizes, stroke, flowrate...)



INJECTION AND DOSING

Never waste a drop: accuracy and flexibility for unrivalled productivity

PCM proposes different technologies to best meet your constraints and requirements in terms of accuracy,loss of ingredients, respect of the product integrity, productivity and ease of cleaning.

The Dosys™ technology is one we use most frequently for its accuracy but also to replace more expensive technologies when considering the high cost of ingredient loss. The inaccuracies and lack of flexibility of conventional dosing systems are the primary sources of high operating costs for most food production processes.

PCM offers our customers the means for unrivalled productivity by providing comprehensive and flexible inline injection and mixing solutions.

- PCM Dosyfruit™ Premium
- PCM Dosyfruit™ Basic
- PCM Dosing Unit
- PCM Hopper Station
- PCM Additive Station

Through each technology, PCM offers different advantages enabling us to adapt and meet your constraints.

PCM DOSYS™ PISTON AND CONTROLLED VALVE PUMPS

These pumps allow accurate dosing at the filling point, maximum repeatability and minimum losses of non homogeneous ingredients with or without particles.

PCM LAGOA DIAPHRAGM DOSING PUMPS

These diaphragm dosing pumps allow metering small doses of low viscosity/corrosive products.

PCM MOINEAU™ PROGRESSING CAVITY PUMPS

They allow the continuous dosing of fragile ingredients for applications that may require high flow rates.

VARIOUS PRINCIPLES OF INLINE INJECTION

PCM inline injection systems are particularly flexible and provide productivity gains through a fully automated process, including the detection and management of containers ending, the elimination of dilution fronts when ingredients are changed, and any changes for cleaning processes (CIP).

Mono-flavour inline injection/mixing (prior hopper)

The injection point is located before the hopper. This is a classic inline process. The dosage is proportional because the additive flowrate (ex: fruit preparation) is controlled by the main ingredient dosage (ex: white mass). A flowmeter measures the flowrate of the main ingredient and orders the Dosys™ pump to send a dose of additive (top dosing). Example of control module command: injection of one dose of additive every 3 liters.

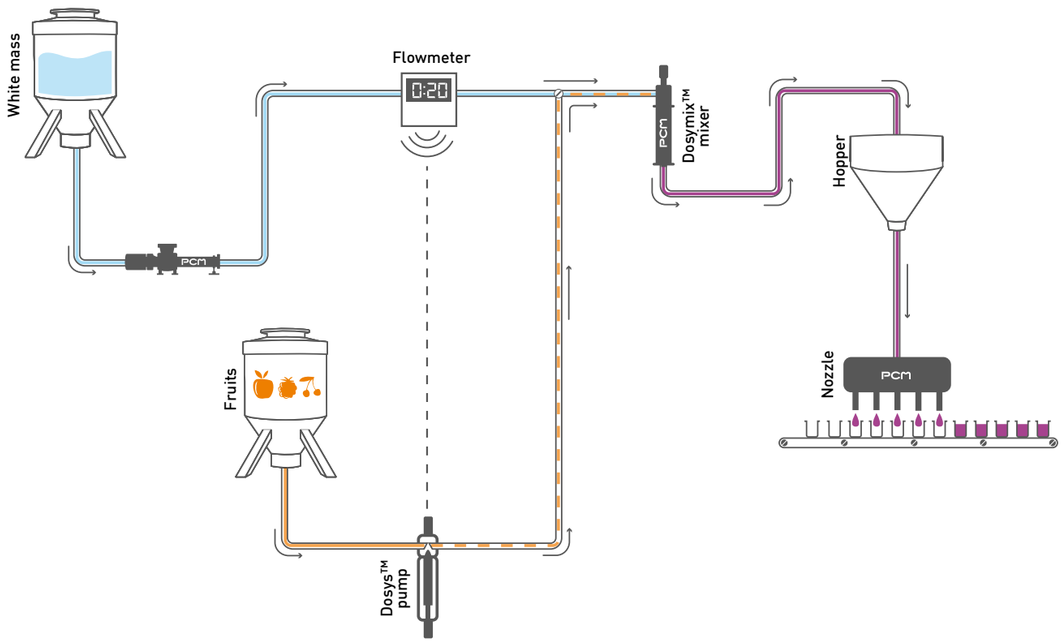

The proportion is always respected regardless the flowrate of the main ingredient.

Just in time inline injection/mixing (post hopper)

The injection point(s) are located after the hopper which stores the main ingredient. This is a "just in time" process because the dosing pumps which inject additives (ex: fruits or colourings preparation), are controlled by the packaging machine.

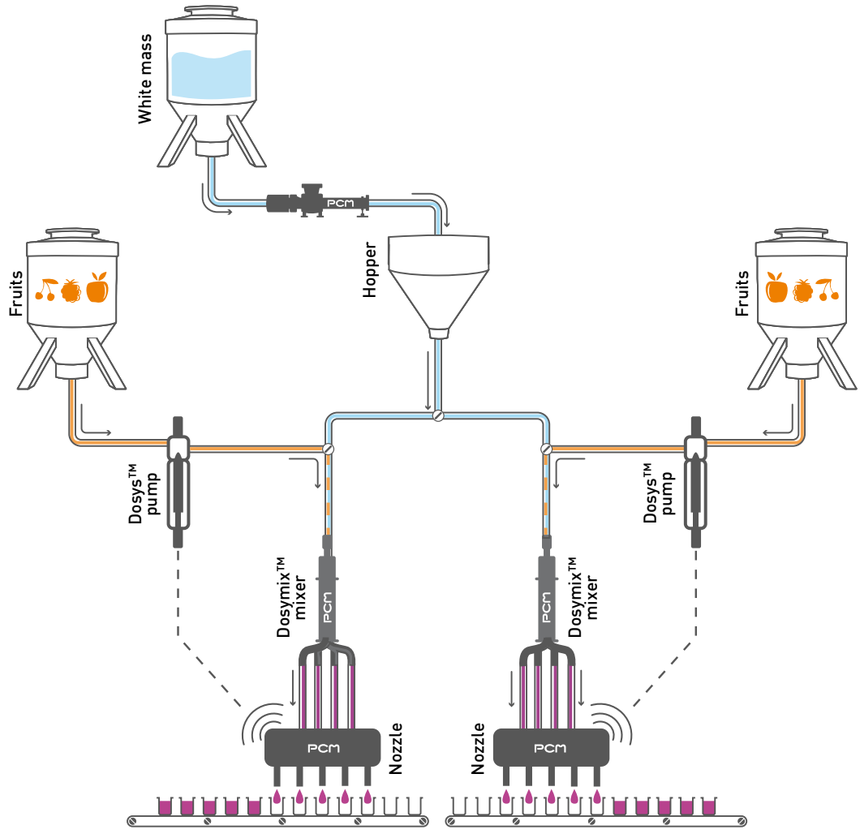

Because the mixing is done at the latest and on request just before the packaging machine, the loss of ingredients is therefore minimal.



PCM DOSYS™

Hygienic Piston Dosing Pump

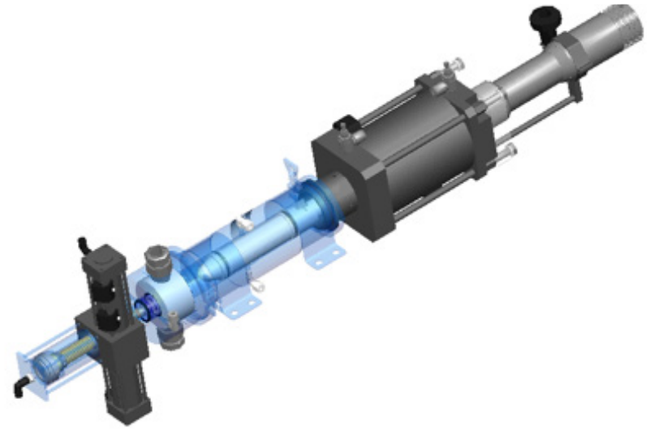

PCM Dosys™ provides an efficient and hygienic pumping and dosing solution for a wide range of applications in the food industry, as well as in the cosmetics and pharmaceutical sectors.

Based on patented Dosys™ technology, it combines a full-bore rotary valve with an actuated piston. **The complete assembly is Clean-in-Place (CIP) and Steam-in-Place (SIP) capable.**

This piston pump e**nsures accurate dosing while preserving product inclusions** and can be synchronized with filling and packaging equipment.

TECHNICAL PERFORMANCE

- **Pressure:** up to 20 bar
- **Displacement volume:** from 0.05 cc up to 2.654 liters
- **Maximum particle size:** up to 48 mm (1,89 in)
- **Clean-in-Place (CIP) and Steam-in-Place (SIP) capable**

APPLICATION EXAMPLES

- Injection of sugar-coated fruit preparations (fruit jam with pieces) into plain stirred yogurt
- Flavor dosing at the bottom of cups
- Rennet dosing into coagulation tanks
- Cheese sauce dosing into prepared meal trays
- Potato salad dosing into trays
- Filling of foundation containing microbeads into bottles
- Filling of glass bottles with pharmaceutical syrups

DOSYS™ PUMP DESIGN

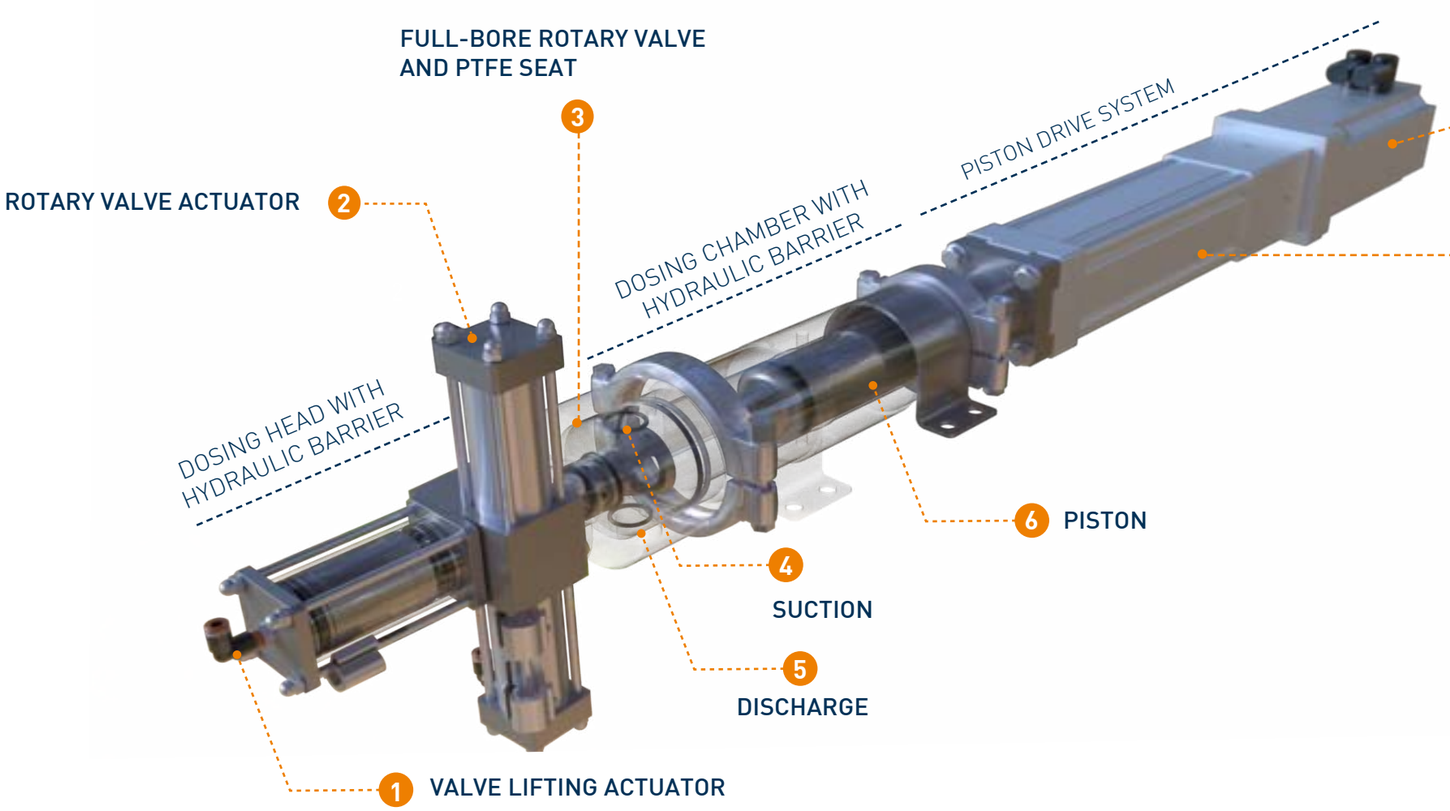

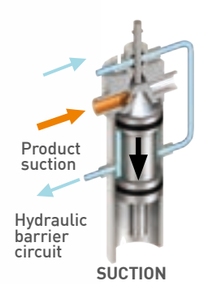

SUCTION

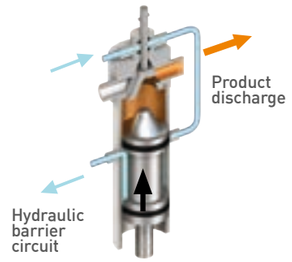

DISCHARGE

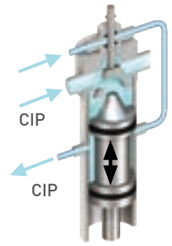

CLEAN-IN-PLACE (CIP)

The pump becomes fully open when the valve is lifted from its seat, allowing unrestricted CIP flow.

DOSING HEAD

- The full-bore rotary valve (without flow restriction), mounted on its PTFE seat, is actuated by a cylinder that opens it during both suction and discharge phases.
- A lifting cylinder disengages the valve from its seat during CIP cleaning, allowing full passage of cleaning solutions without flow restriction, and during steam sterilization.

DOSING CHAMBER

- A stainless steel piston moves inside a stainless steel chamber over a long stroke length, providing an exceptionally wide adjustment range between the minimum and maximum displacement capacities of the Dosys™ pump.

DRIVE SYSTEM

The piston movement can be provided either by:

- A pneumatic cylinder equipped with a manual displacement adjustment system,
- Or a brushless motor mounted on a ball-screw actuator, allowing automatic adjustment of displacement volume, suction speed, and discharge speed.

HYDRAULIC BARRIER

- Both the dosing head (valve) and dosing chamber (piston) are equipped with a hydraulic barrier (double seal arrangement). Water circulates through this barrier during production to lubricate the seals, while cleaning solutions circulate during CIP operations to clean them.

DOSYS™ PUMP ADVANTAGES

HIGH-PERFORMANCE DOSING

- High accuracy and repeatability: ±0.5%
- Easily synchronized with packaging machines or continuous production processes
- Ideal for just-in-time production
- Automatic adjustment of dosing volume with automatic correction capability (brushless actuator version)

RESPECT FOR PRODUCT INTEGRITY

- Handles inclusions up to 48 mm (depending on the selected pump model)
- No agitation within the pump body, preventing emulsification, aeration, or shear damage

HYGIENIC DESIGN

- **Materials compliant with** FDA (USA) requirements and EC Regulation 1935/2004 (European Union)
- Hygienic component design
- The 3-A symbol certifies compliance with hygienic standards published by 3-A SSI, from material selection through equipment design
- Clean-in-Place and Steam-in-Place capable (CIP / SIP)

VERSATILE

- Available in single-head or multi-head configurations with up to 22 dosing points
- Combines low flow rates with large inclusion handling capability (for example: 100 L/h with 20 mm pieces)

PCM DOSYFRUIT™ PREMIUM

The fruit yoghurt benchmark in industrial manufacturing process



PCM Dosyfruit™ premium is a s**ingle or multi-ingredient dosing system with BIB or containers sucking** that is fully automated. It is therefore the market benchmark for the injection and dosing of fruit in fresh dairy products.

SYSTEM BENEFITS

INCREASE THE PRODUCTIVITY AND FLEXIBILITY OF THE INDUSTRIAL EQUIPMENT

- Reduction of machine downtimes : "all-automatic", automatic priming, automatic changeover of containers (no production shutdown), automatic CIP control
- Flexibility: management of several recipes, automatic doses adjustment (Brushless actuator)

MINIMIZE PRODUCT LOSSES

- Fruit on fruit or water on fruit push: limited product losses during recipes changeover
- Water push before cleaning: product recovering on pipes at the end of production
- Dosing synchronization by the packaging machine (just in time)
- Dosys™ pump accuracy: avoids overdosing

100% RELIABLE AND REPEATABLE

- Dosys™ technology (see page 7)

3-A 04-06

GENTLE HANDLING OF SENSITIVE INGREDIENTS WITH OR WITHOUT MARKERS

HYGIENIC

- Hygienic design of components
- Complete automatic cleaning and sterilization in place (sterile air, steam, air and steam filtration, containers foot sterilization)

SYSTEM CONSTRUCTION

- Dosys ™ technology
- Actuator with Brushless drive
- Controlled automatic valves
- End of containers and degassing detection pot
- Sight glass on suction pipe
- Integration of utilities (sterile air, water, CIP, steam)
- Container overpressure hoses
- Drainage collection bin

- Integrated control cabinet with control panel (HMI)
- All stainless steel construction

Options
- Injection point

COMPACT VERSION

Containers integration into the skid

Options
- Containers weighting



PCM DOSYFRUIT™ BASIC

An economical solution for a semi-automatic process for the production of fruit yoghurt

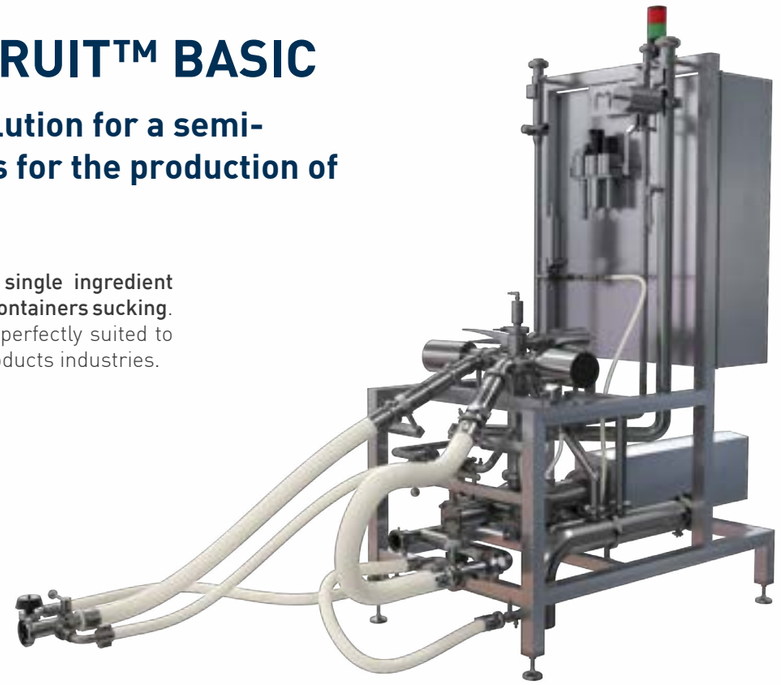

PCM Dosyfruit™ basic is a **single ingredient injection system with BIB or containers sucking**. This economical solutions is perfectly suited to installations of fresh dairy products industries.

SYSTEM BENEFITS

SIMPLICITY OF USE AND FLEXIBILITY

- Manual sleeve priming
- Automatic containers changeover (option)
- Automatic CIP control
- Several recipes management
- Manual dose adjustement (pneumatic actuator)

MINIMIZE PRODUCT LOSSES

3-A 04-06

- Fruit on fruit or water on fruit push: limited product losses during recipes changeover
- Water push before cleaning: product recovering on pipes at the end of production
- Dosing synchronization by the packaging machine (just in time)
- Dosys™ pump accuracy: avoids overdosing

100% RELIABLE AND REPEATABLE

- Dosys™ technology (see page 7)

3-A

GENTLE HANDLING OF SENSITIVE INGREDIENTS WITH OR WITHOUT MARKERS

HYGIENIC

- Hygienic design of components
- Manual cleaning in place and sterilization of sleeves

SYSTEM CONSTRUCTION

- Dosys ™ technology
- Pneumatic actuator
- Manual and/or automatic valves
- End of containers and degassing detection pot
- Sight glass on suction pipe
- Integration of utilities (water, CIP, steam)

- Integrated control cabinet with control panel (HMI)
- All stainless steel construction

Options
- Injection point

PCM HOPPER STATION

A cleanable in place solution with loading hopper for semi-industrial or artisanal applications

With a bulk racking (hopper), the PCM Hopper Station single or multi-ingredient dosing system is the ideal equipment for small production units. This hopper dosing station is perfect for an accurate dosing of heterogeneous fluids.



SYSTEM BENEFITS

MODULAR AND AUTONOMOUS SYSTEM
- Number of hoppers and sizes to choose from (80L or 200L / 21.13 or 52.83 USGAL)
- Autonomous : possibility of integrating a CIP back pump

AUTOMATIC CIP
- The overall system is cleanable in place automatically, including the hopper (without disassembly)

100% RELIABLE & REPEATABLE
- Dosys™ technology (see page 7)

RESPECT OF INGREDIENTS WITH OR WITHOUT MARKERS

HYGIENIC
- Hygienic design of components
- The overall system is cleanable in place automatically

SYSTEM CONSTRUCTION

- Dosys™ technology
- Pneumatic or Brushless actuator
- 80L [21.13 USGPM] standard hopper
- Detection of cover closure
- Detection of product level in the hopper
- Manual and/or automatic valves
- Integration of utilities (water, CIP)
- Cleaning ball integrated into the hopper
- Bridging table for switching from production mode to CIP mode

- Integrated control cabinet with control panel (HMI)
- All stainless steel construction

Options
- Moineau™ technology
- 200L [52.83 USGPM] hopper
- Duo or trio version for multi-ingredient applications

PCM DOSING UNIT

A versatile and cost-effective solution for small production batches

The **PCM Dosing Unit** dosing skid has been specially designed for **single or multi-ingredient heterogeneous dosing (liquid or solid) with BIB, container or bulk racking (hopper)**. It is ideal for the production of small batches, especially for convenience food, bakery or dairy products markets.



SYSTEM BENEFITS

VERSATILITY
- Adaptable to different feeding configurations
- Applications versatility: convenience food, sauces, fruits...

COMPACTNESS & MOBILITY
- Low footprint: ideal for small production units, easy integration in existing units

100% RELIABLE & REPEATABLE
- Dosys ™ technology (see page 7)

RESPECT OF INGREDIENTS WITH OR WITHOUT MARKERS

HYGIENIC
- Hygienic design of components
- Cleaning in place of dosing units

SYSTEM CONSTRUCTION

- Dosys ™ technology
- Pneumatic or Brushless actuator

- Integrated control cabinet with control panel (only for Brushless version)
- All stainless steel construction
- Baseframe on feet or wheels

Options
- Moineau™ technology
- Removable 50L [13.2 USGPM] loading hopper
- Detection of product level in the hopper
- Duo or trio version for multi-ingredient applications

PCM ADDITIVE STATION

The compact solution for injecting small liquid doses

The **PCM Additive station** can pump **single or multiple flavours or liquid additives** through the use of a suction wand. The flavour or additive dose is injected upstream from mixing step into the transfer piping of the main product.



SYSTEM BENEFITS

COMPACT & FLEXIBLE SKID

- Compact: containers placed on the frame
- Flexibility of several recipes management dosing adjustment (from 0.05 cc to 40 cc)

EASE OF USE

- Quick product priming: suction wand as close as possible to the dosing unit and immersed directly into the container
- Synchronization of the dosage through the conditioning machine (just-in-time) or according to the flowrate of the main product
- At the end of production, the suction wand can be positioned in its cleaning sleeve

100% RELIABLE & REPEATABLE

- Dosys ™ technology (see page 7)
- Perfect accuracy of the required dosing (repeatability: 0,5 %)

HYGIENIC

- Hygienic design of the components
- Cleaning in place of dosing units and suction wands

SYSTEM CONSTRUCTION

- Dosys™ technology
- Pneumatic or Brushless actuator
- Vertical pump configuration
- Suction wand adapted to the container
- Suction wand CIP sleeve

- Integrated control cabinet with control panel (HMI)
- All stainless steel construction

Options

- Empty drum detection device
- Injection point
- Containers weight scale
- Dosing detection

PCM LAGOA

The simple and reliable diaphragm dosing pump

The Lagoa pump is designed for **dosing liquid additives, disinfectant products** (acid, soda, detergent...) **for cleaning in place applications.**



PUMP BENEFITS

SIMPLE AND ROBUST CONSTRUCTION

- The pump is driven by a direct mounted light alloy motor with IP55 protection.
- The casing is made of cast aluminium alloy.
- The bearings are greased for life, making the motors maintenance-free.
- The pumphead is easy to remove and change.

RELIABILITY

- Reliability of metering.(accuracy +/1%)
- The stroke adjustment mechanism can be locked in position to ensure that stroke length remains at its set point.

VERSATILITY

- Pumpheads are available in many material combinations. It consists of 1 suction check valve, 1 discharge check valve, 1 liquid end body.
- Dry-running.

PUMP PERFORMANCES

- Maximum flowrate: 315 l/h per pumphead [1.38 gpm]
- Maximum pressure: 12 bar [174 Psi]
- Maximum temperature: 90°C [194°F]
- Adjustable from 10 to 100%

PUMP CONSTRUCTION

- Diaphragm pump technology
- Electro-mechanical drive
- Light alloy motor with IP55 protection
- Cast aluminium alloy casing
- Standard configuration: 1 suction check valve, 1 discharge check valve, 1 liquid end body
- The capacity is set by turning the micrometer dial which is fitted with vernier scale graduated in percentage stroke length. Electric servo control can be fitted.

Options & accessories

- Adjustement controlled by an electric servo-motor (in option)
- Foot valves
- Injection rod
- Safety and retention valves
- Pulsation dampers

LAGOA MULTIPLEXING BENEFITS

- Proportional metering with different fluids
- Greater flow rate
- Pump stroke phases, linear flow





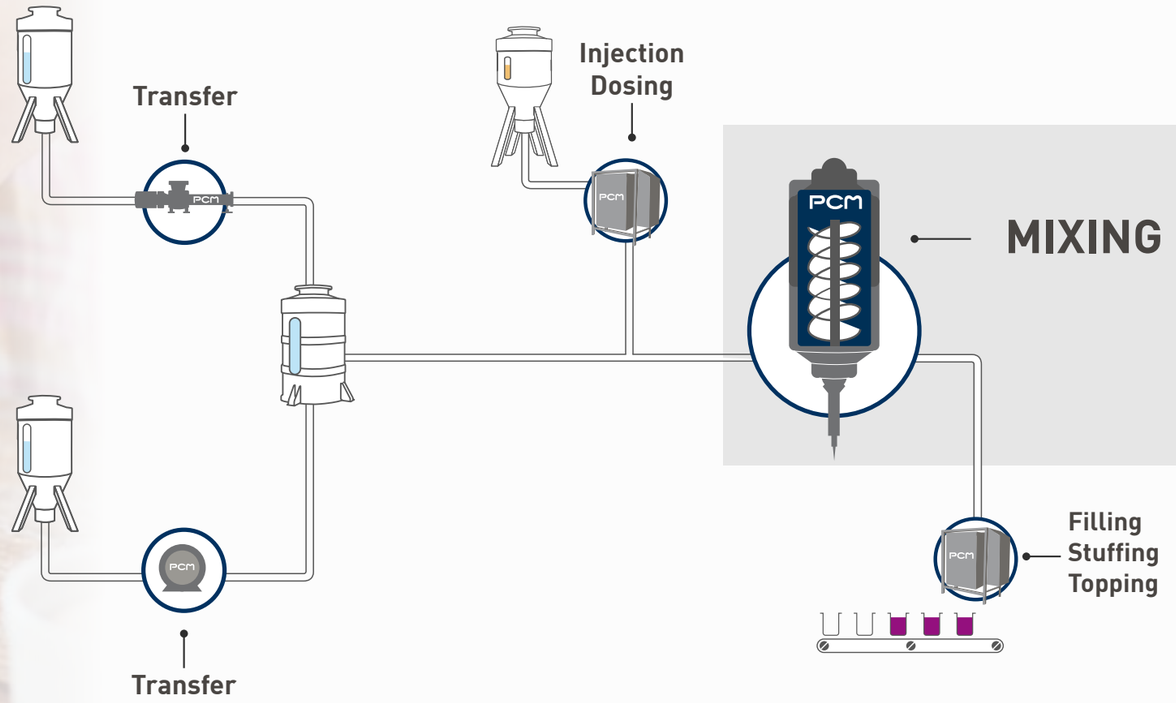

MIXING

Mix with care: introducing a better way to mix with optimized costs!

PCM gives customers the opportunity to reduce the overall operating cost through an inline process rather than more expensive and space consuming batch solutions.

The principle of inline mixing constits of replacing the batch ingredient mixing tank with a continuous mixer. The mixing operation is thus carried out more quickly, in a single pass, and guarantees proportional and homogeneous mixing thanks to increased dispersion power. It allows the manufacture of small batches with quick changeovers for various recipes (see page 42-43 - injection and inline mixing principles).

- PCM Dosymix™
- PCM Dostam

PCM DOSYMIX™ DYNAMIC MIXER

A dynamic mixer will be the ideal choice for mixing heterogeneous or homogeneous, viscous, shear sensitive products with or without pieces.

The rotation of the screw allows easy and efficient cleaning in place.

PCM DOSTAM STATIC MIXER

A static mixer will be recommended for mixing homogeneous liquids without solids.

Our systems guarantee homogeneous mixing without altering the ingredients or the product texture. This eliminates use of costly additives to recover the texture at the end of production line.



DOSYMIX™ INLINE MIXER

Provider of dynamic mixing



The Dosymix™ dynamic mixer preserves the most important asset in your production line: the ingredients.

Thanks to the body design, with twin helixes in opposite directions welded to an impeller, an upward and downward flow is created for **gentle mixing of ingredients and accurate distribution of mixed product**.

The Dosymix™ is **3A** certified (American standards) to ensure a better cleaning efficiency during **Cleaning In Place and/or Sterilisation In Place**.

TECHNICAL PERFORMANCE

- **Pressure:** 10 bar [145 Psi]
- **Flowrate:** 6 m^3/h [26 USGPM]
- **Particles size*:** 25 mm [1 inch]

RANGE

- **5 models**

* Depending on your products, the Dosymix™ can mix bigger particles.

EXAMPLES OF APPLICATIONS

- Fruits, pulp, syrup in stirred yoghurt
- Sugar, glucose, vitamins, flavours in cream and cheese
- Preparations including grapes in desserts
- Ferment, rennet in cheese...

MIXER CONSTRUCTION



OPERATING PRINCIPLE

The residence time in the mixer body (measured in seconds) ensures the quality of the mix. The residence time depends on 2 factors: the internal volume of Dosymix™ and the production rate (l/h).

OPTIONS

- Tandem mechanical seal
- Heating jacket: for particular applications requiring specific temperature
- Drive cover

PCM DOSYMIX™ RANGE BENEFITS

IDEAL FOR SHEAR SENSITIVE PRODUCTS containing solids or fibers
- The round shaped helix prevents the adhesion of ingredients
- Designed for products mixing with different viscosities and/or proportions

COMPLIANCE WITH THE HYGIENIC STANDARDS PUBLISHED BY 3-A SSI
- CIP and SIP facilitated

LOW INTERNAL VOLUME to minimize product losses

MULTI OUTLET
- Dosymix™ is placed prior to the packaging machine. The customer has the flexibility of precise distribution from 1 to 12 outlets

EASY AND QUICK ASSEMBLY/DISASSEMBLY
- Body fixed by Tri-Clamp connection
- Mechanical seal provided in cartridge

MECHANICAL SEAL standardised for both Dosymix™ and HyCare™ progressing cavity pump

PCM DOSYMIX™ TECHNICAL PERFORMANCES

Models	Internal capacity L [USGAL]	Weight kg [lbs]	Drive power (kW)	Speed rotation - Fixe (rpm)	Speed rotation - Variable (rpm)	Connections
DM 1000	3.8 [1]	47 [103.6]	0.75	145 or 300	60 to 300	SMS DIN 11851 DIN 11864 Tri clamp Smooth end
DM 2000	8 [2.1]	53 [116.8]	0.75			
DM 4000	17 [4.5]	90 [198.4]	2.2			
DM 8000	23 [6.1]	107 [235.9]	4			
DM 10 000	30 [7.9]	110 [242.5]	4			
DM 20 000	47 [12.4]	140 [309]	4	145	60 to 200	

Models	Ø inlet mm [inch]	Outlet manifold - Number of outlet & Ø mm [inch] (feasibility to be validated according to the process)				
		1	2 to 4	5 & 6	7 & 8	9 to 12
DM 1000	51 [2]	51 [2]	25/38 [1/1.5]	25 [1]	25 [1]	-
DM 2000	51 [2]	51 [2]	25/38 [1/1.5]	25 [1]	25 [1]	-
DM 4000	63.5 [2.5]	63 [2.48]	25/38 [1/1.5]	25/38 [1/1.5]	25 [1]	25 [1]
DM 8000	76 [2.99]	76 [2.99]	25/38/51 [1/1.5/2]	25/38/51 [1/1.5/2]	25/38 [1/1.5]	25/38 [1/1.5]
DM 10 000	76 [2.99]	76 [2.99]	25/38/51 [1/1.5/2]	25/38/51 [1/1.5/2]	25/38 [1/1.5]	25/38 [1/1.5]
DM 20 000	76 [2.99]	76 [2.99]	63/51/51 [2.48/2.01/2.01]	-/38	-	25 [1]

PCM DOSYMIX™ WITH BUFFER HOPPER

Two key functions for a minimized footprint

By combining all **the functions of a buffer hopper** with the **PCM Dosymix™ mixer**, PCM guarantees a uniform inline mixing that respects your recipes.

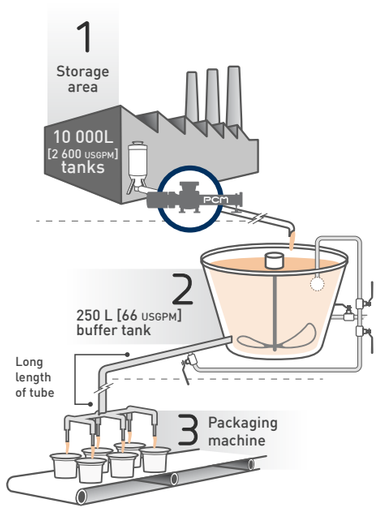

Conventional solution with buffer tank

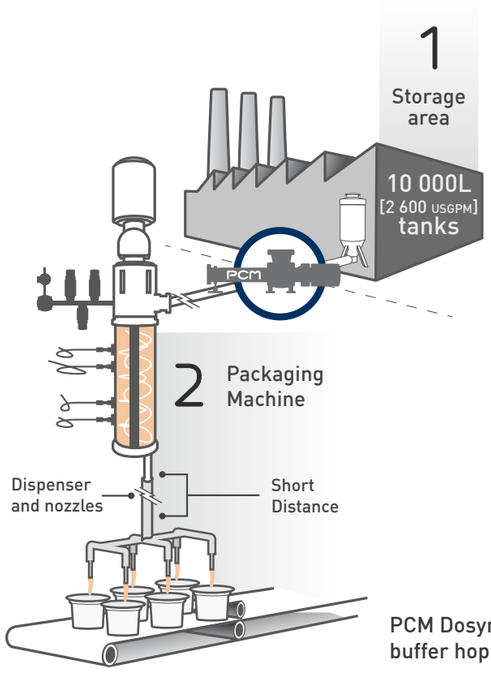

PCM Dosymix™ with buffer hopper solution

PCM DOSYMIX™ WITH BUFFER HOPPER BENEFITS

TWO FUNCTIONS IN ONE

- Function #1 : Buffer hopper with low capacity, positioned before the packaging dosing unit, offering the benefits of a "just in time" production
- Function #2 : Inline dynamic mixer ensuring an homogenization or suspension of the markers (avoiding the decantation of the product before the final dosing).

LOWER CAPITAL INVESTMENT COSTS compared to a batch mixing solution

- Removal of a buffer tank and valve sets from the CIP process

LIMITED PRODUCT LOSSES

- The buffer hopper mixer is integrated as close as possible to the packaging dosing units
- The level management inside the mixer body makes the recipe changeovers more flexible

HYGIENIC DESIGN

AIR REGULATION

- allowing the constant management of the pressure inside the mixer body (pressurization during the dosing and degasing, if necessary during overpressure)

INTEGRATION INTO NEW OR EXISTING MACHINE

EASY CLEANING AND SIMILAR TO A PROCESS PIPING SYSTEM

- No tank with large volume to clean, avoids valve sets and bypasses during CIP/sanitation phases

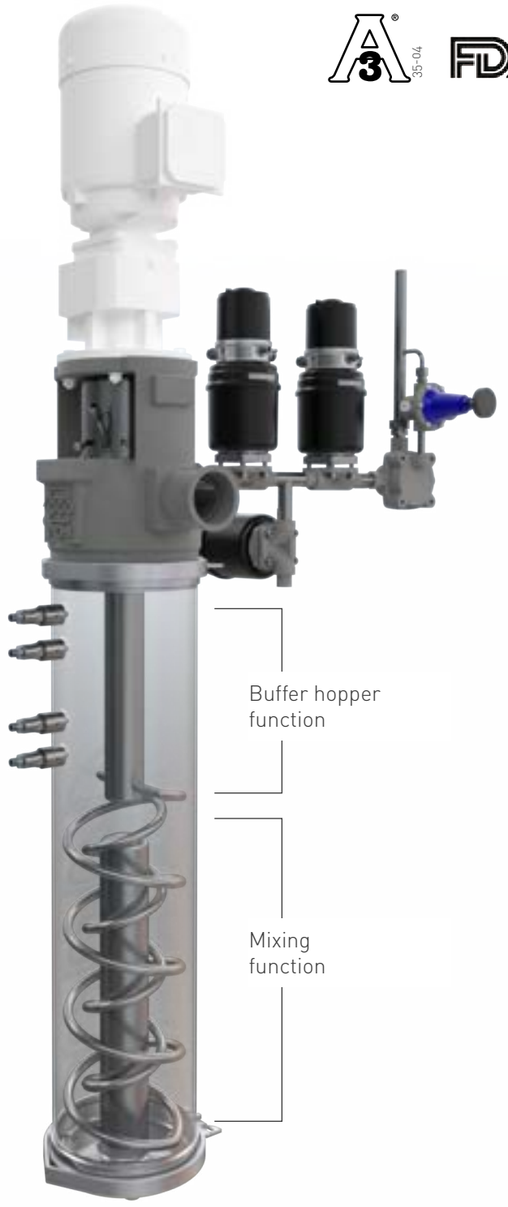

CONSTRUCTION

- PCM Dosymix™ dynamic mixer
- Internal capacity of the mixer body: from 8L to 30L [2.11 to 7.9 usgal]
- Mixing capacity: from 3.5L to 17L [0.8 to 4.5 USGAL]
- Sensors for level management (low/high level regulation, safety and end of production alarms)
- An air regulator equipped with a pressure gauge
- Three diaphragm valves for production and CIP management
- Multi-outlets, smooth ends options
- Clamp collars to ease maintenance and accessibility

Options

- Frequency converter

APPLICATIONS

- Just in time mixing: fruit in stirred yoghurts...
- Maintaining the markers in suspension: vegetables with sauces, vinaigrette with or without herbs...



DOSTAM INLINE MIXER

Simple, yet innovative and effective

With a simple design, the Dostam is a **static mixer** easy to integrate in your installation.

No power is required to use it. Product is pumped through the static mixer via the transfer pump located upstream of the installation.

PCM Dostam is recommended for the **mixing of homogeneous fluids without pieces**.



TECHNICAL PERFORMANCE

- **Flowrate:** 85 m^3/h [374 USGPM]
- **Particle size :** 12 mm [0.47 in]

RANGE

- **6 models**

EXAMPLES OF APPLICATIONS

- Oil and flavours, vitamins
- Drinking yoghurts, aromas, pulps
- Beverages, water, syrup
- Chocolate, flavours

MIXER CONSTRUCTION



1 FIXED 10 HELICAL LINKS

Surface finishes: polished (RA 0.8 µ)

2 STAINLESS STEEL TUBE WITH CONNECTION FITTINGS AND STOPPER

Surface finishes:
polished RA 0.8 µ (interior)
glass blasted RA 1.6 µ (extrerior)

OPERATING PRINCIPLE

The fluid velocity through the elements enables efficient mixing.

When the fluid encounters the 1st element, it is divided into two streams, and then four in the 2nd element, and so forth. This division of the flow as well as the fluid rotation through the crosscutting 90° left and 90° right of the links, allows homogeneous mixing.

The upstream pumps, for bases and additives, can be set up with a continuous flowrate (Moineau™ technology) or with a synchronised pulsating flow (Dosys™ technology).

The mixer must be correctly sized to provide sufficient operating speed and guarantee a mixture quality.

DOSTAM RANGE BENEFITS

DESIGNED FOR HOMOGENEOUS PRODUCTS MIXING

The Dostam range consists of 5 models enabling to handle from 800 liters to 30 000 liters/h [211.33 to 7 925.16 USGPH]. It is the **ideal solution for mixing homogeneous or non sensitive fluids** such as: water, syrup, drinking yoghurts, fruits pulps, oils, flavours.

LOW INTERNAL VOLUME to minimize product losses.

The low internal volume of these mixers is between 0.2 liters to 12 liters [0.05 to 3.30 USGPM]depending on the model. It is extremely low and advantageous during installation cleaning.

EASY INTEGRATION

Although the element design is a complex and technical component, the Dostam is a simple equipment to integrate into your industrial process as it can be simply connected to the existing piping.

ASSEMBLY

Vertical or horizontal installation

ENERGY SAVINGS AND EASY MAINTENANCE

PCM Dostam is a static mixer. There is no drive, the fluid transfer is generated through the upstream pump. **Our mixers contain no moving parts, that means no wear parts** (excluding seals).

DOSTAM TECHNICAL PERFORMANCES

Models	Internal capacity L [USGAL]	Ø inlet exterior pipe mm [inch]	Ø inlet interior pipe mm [inch]	Total length mm [inch]					Ø SMS & Tri Clamp mm [inch]	Ø DIN male mm [inch]
				Smooth end	SMS	DIN 11851	DIN 11864-1 Form A	CLAMP		
EDSA-02510	0.18 [0.05]	25 [1]	22.6 [1]	450 [17.72]	484.5 [19.07]	501 [19.72]	533 [20.98]	497 19.57]	25 [1]	25 [1]
EDSA-03810	0.67 [0.18]	38 [1.5]	35.6 [1.42]	698 [27.58]	737 [29.02]	757.2 [29.81]	793 [31.22]	745 [29.33]	38 [1.5]	40 [1.57]
EDSA-05110	1.67 [0.44]	51 [2]	48.6 [1.90]	906 [35.67]	946 [37.24]	969 [38.15]	1 002 [39.45]	953 [37.52]	51 [2]	50 [1.97]
EDSA-06310	3.13 [0.83]	63.5 [2.5]	60.3 [2.38]	1 089 [42.87]	1 133 [44.61]	1 161 [45.71]	1 210 [47.64]	1 136 [44.72]	63 [2.5]	65 [2.5]
EDSA-07610	5.33 [1.41]	76 [3]	72.8 [2.87]	1 274 [50.16]	1 320 [51.97]	1 356 [53.38]	1 399 [55.08]	1 321 [52.01]	76 [3]	80 [3.15]
EDSA-10410	12.57 [3.30]	104 [4.1]	100 [3.9]	1 601 [63.03]	1 650 [64.96]	1 699 [66.89]	1 731 [68.15]	1 644 [64.72]	104 [4.1]	100 [3.9]



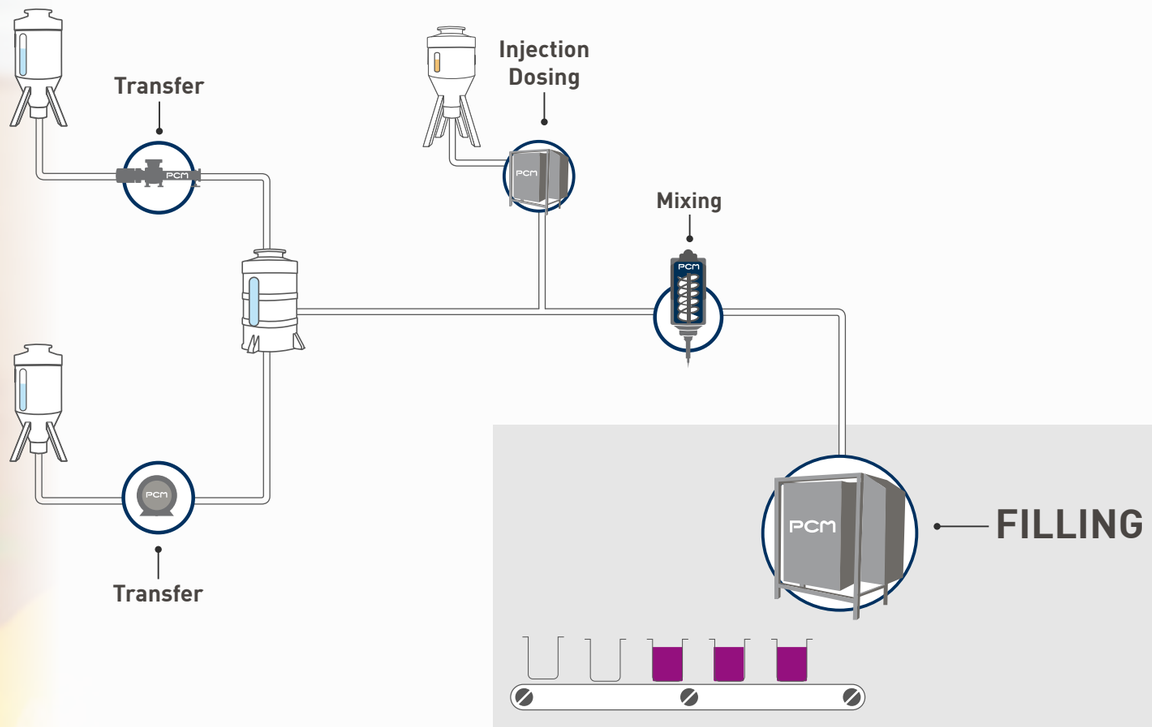

FILLING

The control of a clean and accurate dosage

Filling refers to the act of filling or dosing into any type of container intended for the final consumer or for use in collective catering.

The implementation of innovative agri-food products requires the availability of a high-performance filling solution that will effectively handle with the complexity of mixtures, recipes and packaging techniques. Today, creativity in terms of containers and the diversity of textures to be packaged seems limitless. PCM filling systems are designed to provide the versatility and precision required for these critical operations.

PCM filling systems offer maximum volumetric versatility. You can fill containers of any shape and size, while varying the filling volume considerably from one cycle to the next. The same system can therefore be adapted to fill a wide variety of ingredients: from liquid flavours to the most viscous jams, from sticky caramels to sauces of various sizes.

- PCM Dosyfill
- PCM Additivefill

DIAPHRAGM NOZZLE	MULTI-OUTLET DIAPHRAGM NOZZLE	METAL/METAL NOZZLE	UMBRELLA NOZZLE	WHOLE WAY NOZZLE	SUCKBACK NOZZLE	SMALL CAPACITY SUCKBACK NOZZLE
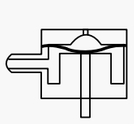	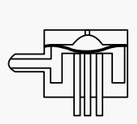	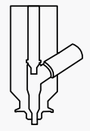	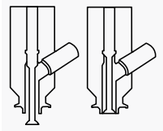	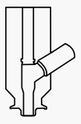	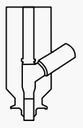	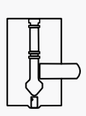
Technically simple, no dripping	Prevents foaming thanks to multi-outlets	Nozzle nose seal suitable for liquids	Good distribution in the container	Large chunk passage suitable for viscous fluids	Avoids contamination on the container, "drawback of particles at the end of nozzles"	Pull the string up into the nozzle body at the end of the dosing process
Liquid, viscous, non stringy products without pieces Béchamel, fresh cream, milk	Liquid, viscous, non stringy products without pieces Seeded cheese, soups, tray bottom filling	Liquid, viscous ingredients with pieces Sauces with markers, bottom of pot with markers	Liquid, non-viscous ingredients with pieces Jams, rice pudding, potatoes in sauce	Viscous, non-sticky ingredients with pieces Convenience food (ratatouille, gratin dauphinois), canned fruit salad, filling tube or pot with clay paste	Viscous, sticky, stringy ingredients with pieces Semi-solid stringy products (prunes, tomatoes)	Sticky and stringy products, without pieces Caramel, chocolat, honey

PCM DOSYFILL

Dosing and filling solutions adapted to your product packaging

PCM Dosyfill filling system is ideal for handling **viscous or fragile products with or without markers, no matter the containers**.

SYSTEM BENEFITS

A "CUSTOMIZED" SOLUTION FOR YOUR APPLICATIONS

- Can be adapted to various containers, products or existing production lines
- Two available dosing technologies, PCM Moineau™ or PCM Dosys™, to meet the requirements of our customers (doses, cadences, flowrate...)
- Wide range of filling nozzles depending on the products to package (stringy, viscous, large pieces...)

DIVERSITY OF CONTAINERS & APPLICATIONS

- Pouches (sauces for out-of-home catering)
- Buckets (fruits & vegetables preparation)
- Bags (minced meat)
- Pots (fresh dairy products) or bottom pots (multi-layers preparations)
- Thermoformed containers (convenience food)
- Flacons (cosmetics)

100% RELIABLE & REPEATABLE

- Dosys™ technology (see page 7) or Moineau™ technology (see page 6)

HYGIENIC

- Hygienic design of components
- Cleaning in place of the overall system, whatever the proposed solution



APPLICATION EXAMPLE

PCM DOSYFILL - Filling of various cosmetic products on flasks

Process
- Doses from 9 to 180ml [0.0024 to 0.047 USGAL]
- 30L [7.93 USGAL] hopper racking

Construction
- 1 **Dosys™ technology** pump
- Brushless actuator
- 1 pinching nozzle (4mm [0.16 inch] diameter) + 2 static nozzles (4/6 mm [0.16/0.24 inch] & 6/8 mm [0.24/0.31 inch] diameter)
- Integrated cabinet and control panel
- "Top dosing" foot pedal control

APPLICATION EXAMPLE

PCM DOSYFILL - Filling of a viscous preparation with particles on bags or Euro tote/Bin buggies

Process
- Dosing on two stations in alternating mode
- Doses from 10 to 15Kg [22 to 33 lbs] (bags) or 200Kg [441 lbs] (E-buggies)
- Hopper racking
- Dose control by weighing: pump controlled by the scale to reach the desired setpoint
- Integration of a CIP pump
- Cleaning in place of the overall system (excluding hopper)

Construction
- 1 Hycare™ hygienic pump (**Moineau™ technology**)
- Brushless actuator
- 2 sleeve nozzles (51 mm [2 inch] diameter) mounted on retractable support arm
- Integrated cabinet and control panel
- 1 push-button dispensing



APPLICATION EXAMPLE

PCM DOSYFILL 3 HEADS - Filling of liquid sauces with or without pieces in preformed cups



Process
- Doses from 15 to 60gr [0.03 to 0.13 lbs]- cadence from 8 to 10 strokes/mn
- Stroke by stroke dosing
- Displacement, on 1 axis, of the conditioning nozzles through Brushless actuator - 7 steps
- "Parked" position for nozzle priming and cleaning
- Cleaning in place of the overall system
- Integration into the existing customer conditioning line

Construction
- Compact and monobloc unit
- 3 **Dosys™ technology** pumps
- Brushless actuator
- 3 whole way nozzles (12 mm [0.47 inch] diameter)
- Integrated cabinet and deported control panel for operators

PCM ADDITIVEFILL

Micro dosing solutions for liquid ingredients

PCM Additivefill skid is designed for **liquid homogeneous products dosing and filling in any types of containers.** This filling system is the ideal solution for dairy industries for dosing small doses of rennet in the bottom of yoghurt pots.

SYSTEM BENEFITS

A SOLUTION ADAPTED TO YOUR APPLICATIONS

- Can be adapted to various containers and customers processes
- Two available dosing technologies, PCM Dosys™ or diaphragm MDS (Synchronized multi dosing heads) to meet customer requirements. The choice of technology will depend on the desired accuracy , number of flavours, cadences and doses.
- Dosing control with various volumes of several different products in a single cycle
- Compact and mobile solution, can be easily integrated on new or existing installations

DIVERSITY OF CONTAINERS & APPLICATIONS

- Cups (aromas, colorings, additives)
- Bottom of cups (rennet)

100% RELIABLE & REPEATABLE

- Dosys™ technology (see page 7)

HYGIENIC

- Hygienic design of components
- Cleaning in place of the overall system



APPLICATION EXAMPLE

PCM ADDITIVEFILL - Dosing of rennet (homogeneous liquid) at the bottom of pots

Process

- Doses:1cc - cadence 160 cups/mn
- Product suction directly into the drums positioned on the frame
- Dosing synchronization through the conditioning machine
- Rennet dosing directly into the pots / Cycle synchronized for the two dosing heads
- Automatic adjustment of doses according to the selected recipe
- Automatic end product detection in cans
- Cleaning in place without dismantling

Construction

- Compact unit
- 2 **Dosys™ technology** pumps
- Brushless actuator
- Vertical pump configuration
- Suction pipe adapted to the container and product level sensor
- Cleaning sleeve for suction pipe
- Integrated control cabinet with control panel

APPLICATION EXAMPLE

PCM ADDITIVEFILL - Dosing of aromas in cups

Process

- Doses from 0,8 to 1,4 cc - cadence 30 strokes/mn
- Product suction directly into the drums positioned on the frame
- Dosing synchronization through the conditioning machine
- Dosing of aromas directly into the pots / Dosing cycle synchronized for the 20 heads
- Dose control by manual adjustment of the diaphragm stroke
- Cleaning in place without dismantling (closed circuit), suction of the solution from the tanks

Construction

- Compact and mobile unit
- 1 **MDS dosing unit with 20 heads**
- Diaphragm metering heads with a needle valve at the inlet and a ball valve with truncated conical spring return at the outlet
- Same drive for the 20 heads by rotary cylinder with pneumatic actuator
- 1 distribution plate equipped with 20 static nozzles
- 1 cleaning solution recovery tank fixed on the frame
- Flexible pipe sets between the supply and dosing units
- Electropneumatic control cabinet





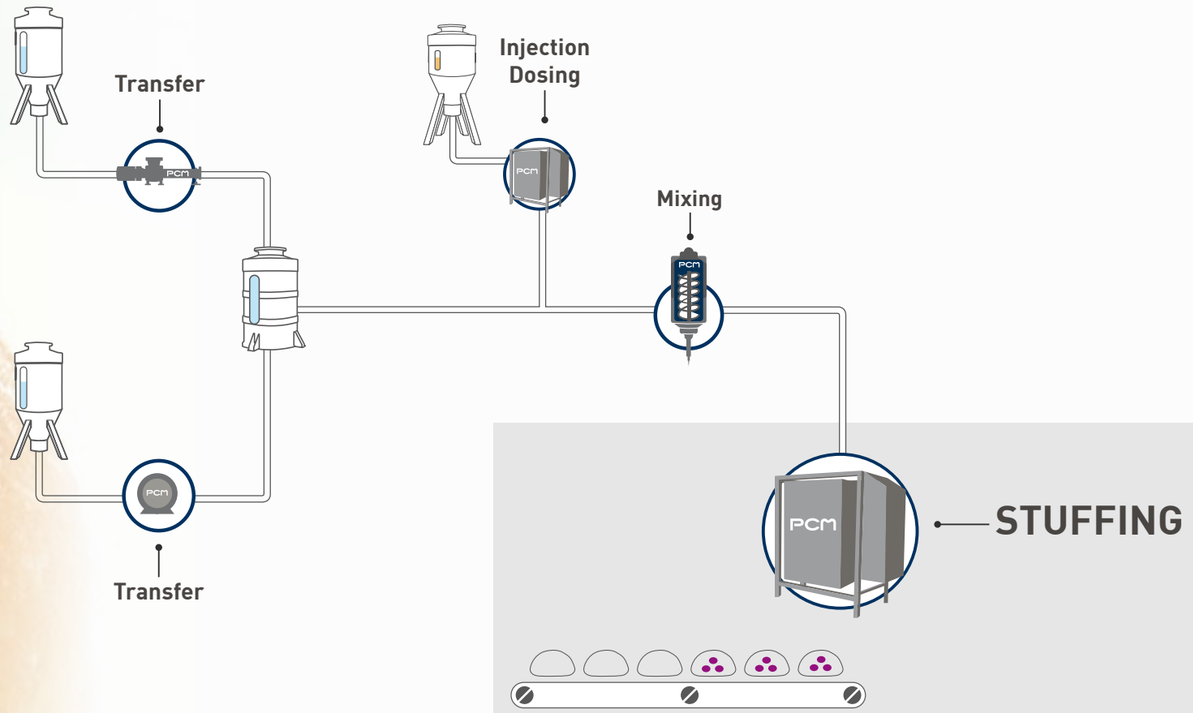

STUFFING

Freedom to be creative: put ideas into production through versatility and maintenance of product integrity

Stuffing refers to the action of injecting a dose of an ingredient into a food preparation.

Many applications of stuffing ingredients, often viscous (fruit preparation) or stringy (caramel), are used in the bakery and pastry sector, such as the manufacture of bread rolls stuffed with jam or in the production of cream puffs. But there are also applications for stuffing liquid doses to flavour preparations.

To meet these constraints, PCM has different transfer and dosing technologies coupled with quilting systems (stuffing needles).

- PCM Dosyfeed
- PCM Additivefeed

SINGLE OR MULTIPLE NEEDLES	SUCKBACK NOZZLE WITH NEEDLES
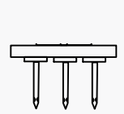	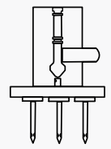
Possibility to orient the right or lateral injection jet One or more outlets at the end of the needle	Cleanliness of the stitching thanks to product suckback
Liquid ingredients Bread roll aromas, fruit pulp in "donuts"	Liquid ingredients Injection of flavours, caramel, chocolate, honey

PCM DOSYFEED & ADDITIVEFEED

"Turnkey" solutions for your product stuffing

PCM Dosyfeed system allows viscous and heterogeneous ingredient stuffing such as jam, honey, chocolate in small buns.

PCM Additivefeed system will be more adapted for homogeneous liquid aroma stuffing in various baked preparations.



Small buns stuffing with cream
MDS technology and needle system (PCM Additivefeed)

SYSTEMS BENEFITS

A "CUSTOMIZED" SOLUTION

- Can be adapted to the dimensions of your final products and to the distribution of stuffing ingredients
- PCM Dosys™ or diaphragm MDS (Synchronized Multi Dosing heads) technology that meets the customer's requirements (product, cadence, doses...) and a needle system adapted to viscous, stringy, heterogeneous stuffing products...
- Consideration of existing installations, machine dimensions, conveyor widths

100% RELIABLE & REPEATABLE

- Dosys™ technology (see page 7)
- MDS technology (see page 9)

HYGIENIC

- Hygienic design of components
- Cleaning in place of the overall system

APPLICATION EXAMPLE

PCM DOSYFEED 22 HEADS - Small milk rolls stuffing with viscous products

Process

- Doses: 3 gr/rolls [0.007 lbs] - machine cadence: 24 000 products/h
- Container unloading and transfer of the product to a buffer tank
- Container changeovers without production shutdown
- Product temperature retention throughout the process
- Stuffing of 22 rolls simultaneously
- Synchronization of the stitching with the conveyor
- Rolls detection to avoid the dosing in the absence of products on the conveyor
- Cleaning in place of the overall installation

Construction

- 1 Dosys™ technology GACC pump for the containers unloading
- 2 dosing units including 11 Dosys™ technology pumps with common Brushless actuator
- 2 nozzle distribution plates for 2 x 11 rolls simultaneous stuffing
- 22 suckback nozzles including for each 11 needles for the stuffing distribution
- 3-axis manipulator to handle the needle plate
- Double jacketed collector and process piping for temperature retention
- Optical sensor for rolls detection
- 2 Cip tanks for nozzle distribution plate cleaning and CIP return tank
- 1 utility package for CIP, air, hot water / 1 centrifugal pump for CIP return
- Sensor for product presence, temperature, level and pressure

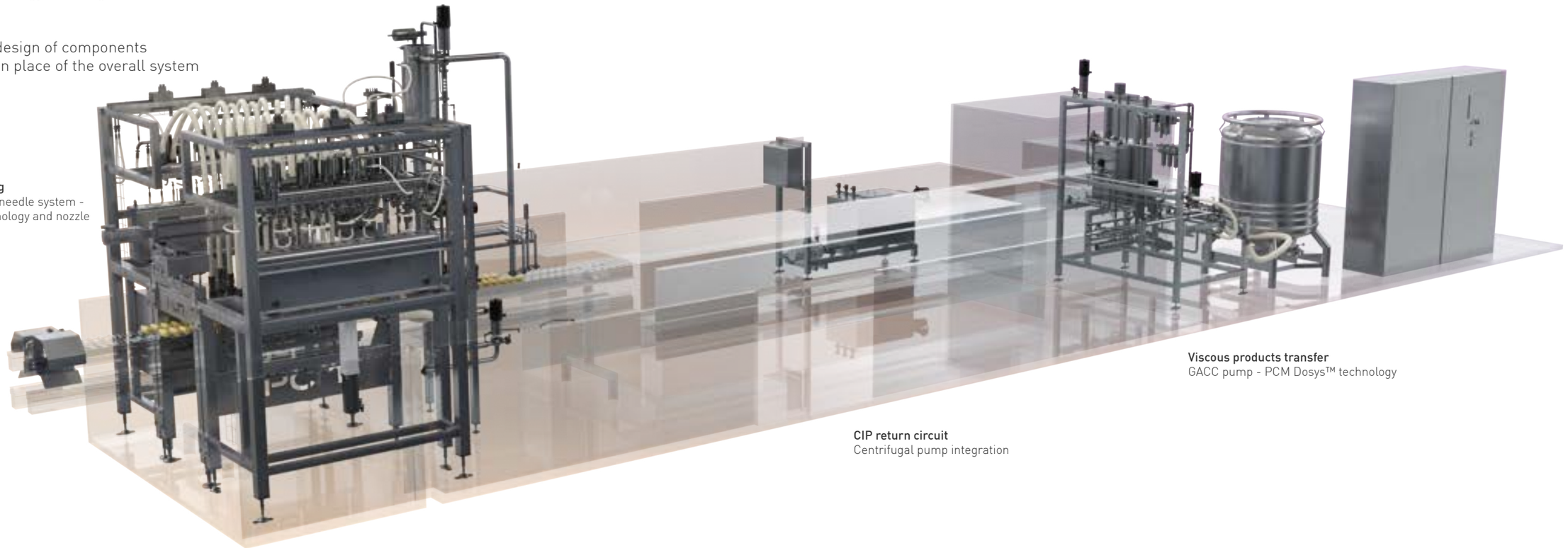

Small buns stuffing
2 dosing units and needle system - PCM Dosys™ technology and nozzle distribution plate

CIP return circuit
Centrifugal pump integration

Viscous products transfer
GACC pump - PCM Dosys™ technology



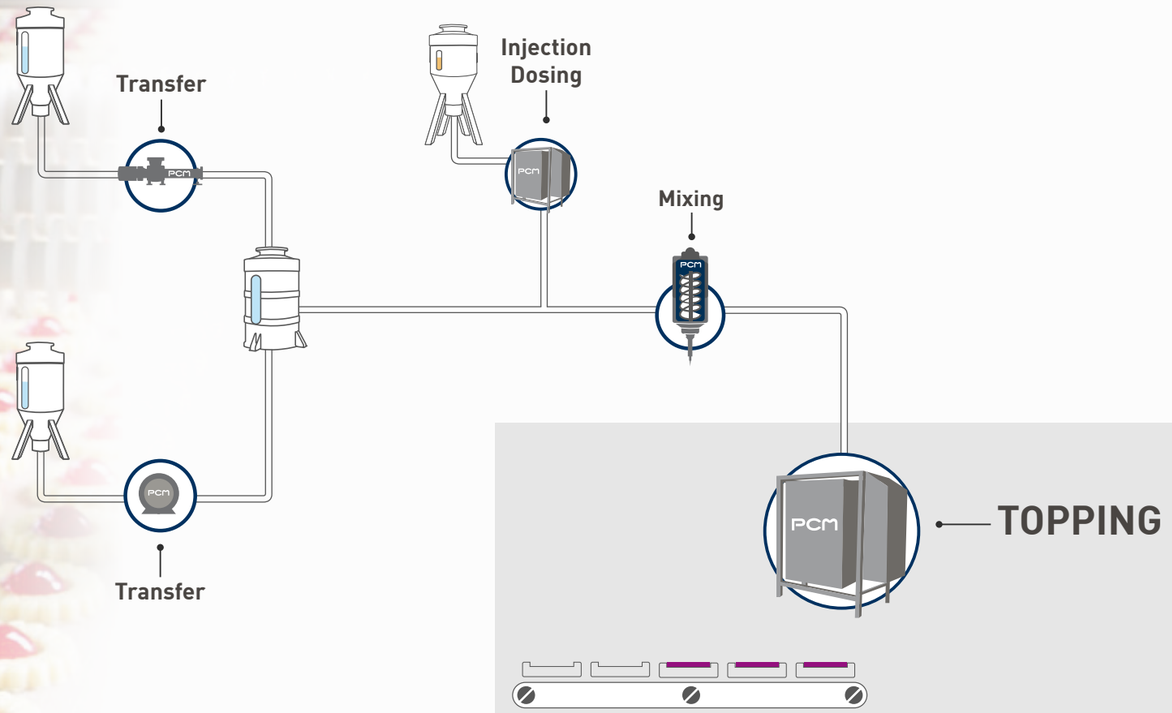

TOPPING

An ultimate and delicate step in the completion of your recipes

Topping means the action of depositing a dose of ingredient to partially or completely cover a food preparation.

This final step is complex because it completes your preparation, it must not risk any imperfection.

For this delicate step, the dosing and transfer technologies are the same as in previous applications but differ by the use of specific nozzles.

- **PCM Dosytop**

MULTI-OUTLET DIAPHRAGM NOZZLE	UMBRELLA NOZZLE	WHOLE WAY NOZZLE	SUCKBACK NOZZLE	SMALL CAPACITY SUCKBACK NOZZLE
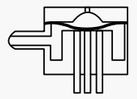	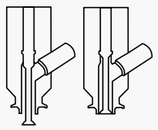	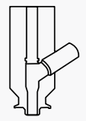	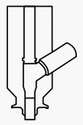	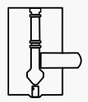
Prevents foaming thanks to multi-outlets	**Good distribution and dispersion inside the container**	**Large chunk passage suitable for viscous fluids**	**Avoids contamination on the container, "drawback of particles at the end of nozzles"**	**Pull the string up into the nozzle body at the end of the dosing process**
Liquid, viscous, non stringy products without pieces Sauce coating on solid, container bottom coating	Liquid, non-viscous ingredients with pieces Liquid sauces	Viscous, non-sticky ingredients with pieces Jams, chicken or tuna crumbs on sandwiches, Bolognese sauce	Viscous, sticky, stringy ingredients with pieces Semi-solids stringy products: tomatoes	Sticky and stringy products, without pieces Caramel, chocolate, honey topping

PCM DOSYTOP

Topping solutions adapted to your recipe achieving

PCM Dosytop is the ideal system for the topping of viscous and/or heterogeneous ingredients on various food preparations.

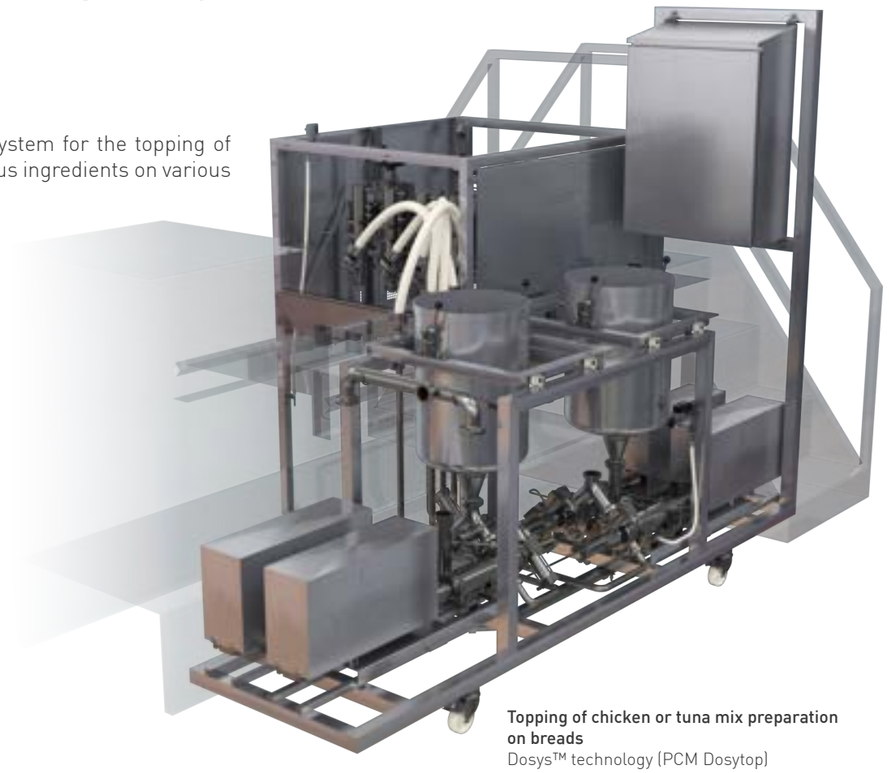

Topping of chicken or tuna mix preparation on breads
Dosys™ technology (PCM Dosytop)

SYSTEM BENEFITS

A "CUSTOMIZED" SOLUTION

- Can be adapted to the dimensions of your final products in any type of containers and to the topping ingredients
- A PCM Dosys™ or PCM Moineau™ technology that meets the requirements of customer processes (products, cadences, doses, ...) and a topping system adapted to viscous, stringy, heterogeneous coating products
- Consideration of existing installations, machine dimensions, conveyor lengths

DIVERSITY OF PRODUCTS/APPLICATIONS

- Biscuits, cakes - Application of jam, caramel, chocolate,...
- Convenience food - Coating of preparations with sauces, creams, vinaigrettes,...
- Bread, Viennoiserie - Application of mixes of preparations on sandwiches, icing

100% RELIABLE & REPEATABLE

- Dosys ™ technology (see page 7) or Moineau™ technology (see page 6)

HYGIENIC

- Hygienic design of components
- Cleaning in place of the overall system

APPLICATION EXAMPLE

PCM DOSYTOP 4 HEADS - Topping of chicken or tuna mix preparation on breads

Process
- Doses from 28 to 60gr/bread [0.06 to 0.13 lbs]- machine cadence: 3500 breads/h
- Manual loading of the customer preparations directly on the hoppers
- Automatic product priming to the conditioning nozzles
- Automatic dose adjustment through recipe management
- Top dosing when the cells detect the presence of bread
- Simultaneous topping of the mix preparation with 4 heads
- Manually vertical and lateral adjustment of conditioning nozzles
- Detection of low tank level for hopper loading or end of production
- Cleaning in place (excluding hoppers) with CIP collector to be positioned at the nozzle outlet

Construction
- 2 x 50L [13.2 USGAL] loading tanks with covers
- 1 dosing unit equipped with 4 **Dosys™ technology** pumps
- Brushless actuator enabling automatic recipes management
- 1 topping station with 4 whole way suckback nozzles (diameter: 20 mm [0.79 inch])
- Nozzles and handwheels plate for manual adjustment of nozzle positioning
- 316L stainless steel priming and CIP return collector
- 1 electrical panel
- 1 remote pneumatic box fixed on the dosing frame
- Fixed protective housings and access doors for maintenance with safety switches

APPLICATION EXAMPLE

PCM DOSYTOP 14 HEADS - Jam topping on rectangular shortbreads

Process
- Product doses: 7gr/biscuit [0.015 lbs]- machine cadence: 450 to 850 biscuits/mn (60 topping/mn max on 14 biscuits rows)
- Product viscosity: from 200 000cpo to 350 000cpo
- Drum unloading (customer product) to the feeding system tank
- The feeding system supplies a transfer pump and limits the incorporation of air into the high viscosity customer preparation. The transfer pump feeds the overall topping system which is equipped with 14 dosing pumps.
- Topping synchronization with the conveyor movement (belt speed)
- The dough pieces are detected by rows. The topping is triggered by the presence of the dough piece.
- Jam topping on 14 dough pieces simultaneously
- Cleaning in place of the overall system (feeding/transfer/topping systems)

Construction
- 1 Viscofeeder equipped with a 500L tank [132 USGAL] and a feeding pressure controller
- 1 **Moineau™ technology** transfer pump (integrated into the feeding system)
- 1 316L stainless steel feeding collector with 14 heads
- 1 topping unit including 14 Moineau™ dosing pumps
- 14 nozzles specifically designed for the topping on biscuits
- 1 conveyor tracking system using Brushless technology and detection cells
- 1 CIP return collector equipped with 14 check valves
- CIP equipment: 2 centrifugal pumps for CIP suction/discharge and valve sets

CHOOSE YOUR APPLICATIONS

and create your ideal combinations...

EXAMPLE OF A COMBINATION OF FUNCTIONS

Industrialization of stirred yoghurts production

(High production cadences)

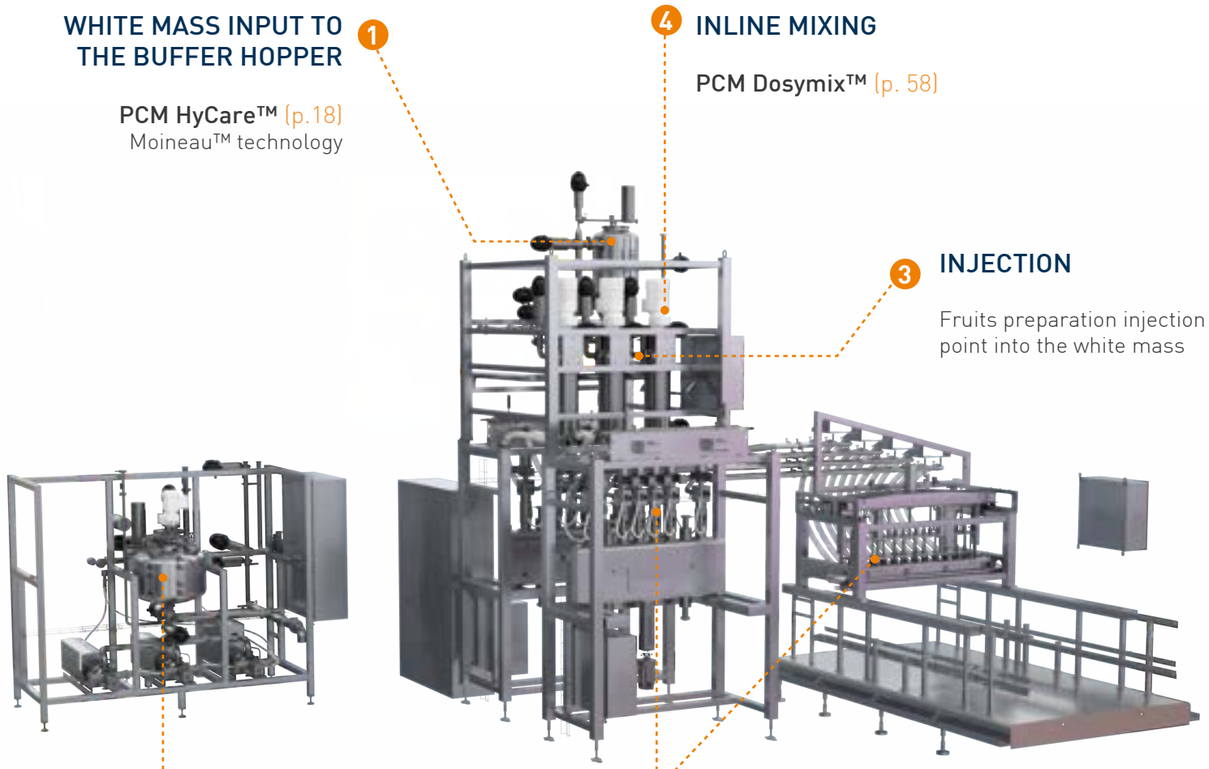

1 WHITE MASS INPUT TO THE BUFFER HOPPER

PCM HyCare™ (p.18)
Moineau™ technology

2 FRUIT INLINE DOSING & INJECTION

PCM Dosyfruit™ Premium (p.50)
- 80L [21 usgal] buffer hopper with mixer
- PCM Dosys™ dosing pumps

3 INJECTION

Fruits preparation injection point into the white mass

4 INLINE MIXING

PCM Dosymix™ (p. 58)

5 FILLING

PCM Dosyfill 12 heads (p.70)
- PCM Dosys™ dosing heads
- Nozzle distribution plate with unique actuator
- Whole way nozzle (diameter: 35 mm / 1.38 inch.)

EXAMPLE OF A COMBINATION OF FUNCTIONS

Artisanal production of yoghurts or stirred yoghurts

(Versatility, small production batches, frequent recipes changeovers)

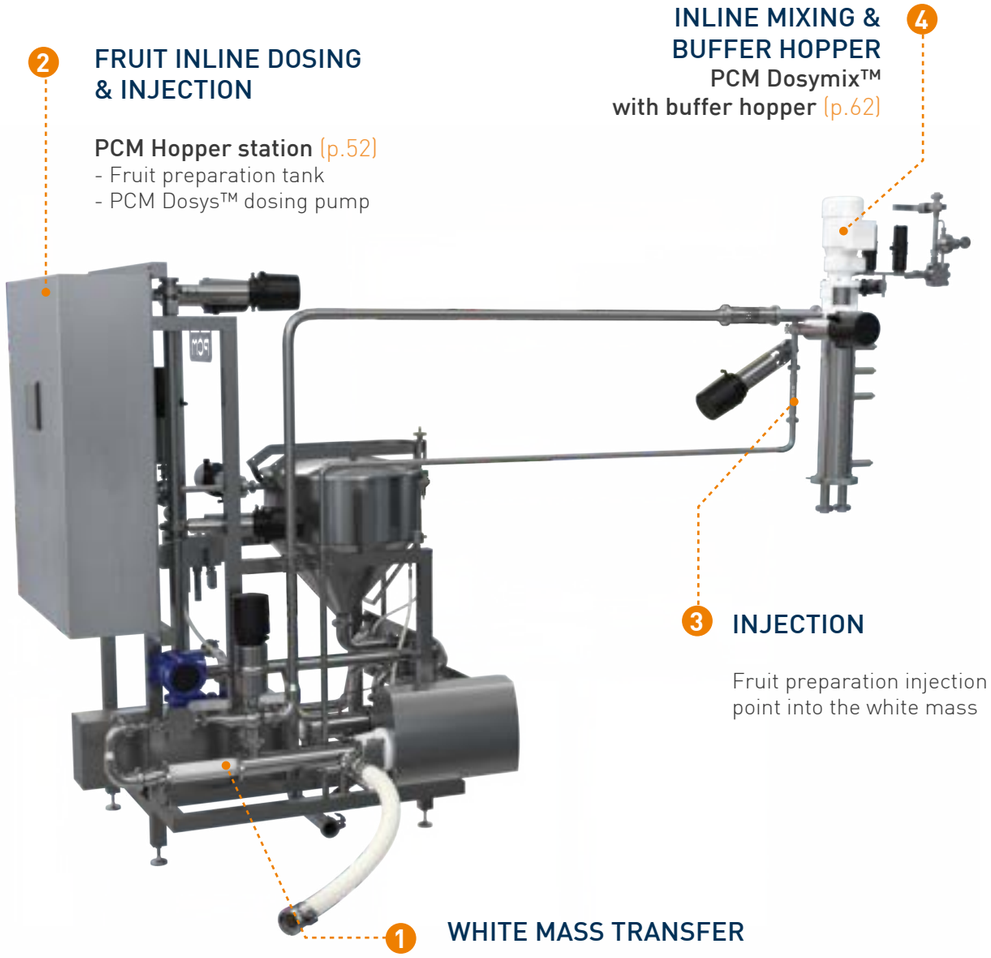

2 FRUIT INLINE DOSING & INJECTION

PCM Hopper station (p.52)
- Fruit preparation tank
- PCM Dosys™ dosing pump

4 INLINE MIXING & BUFFER HOPPER

PCM Dosymix™ with buffer hopper (p.62)

3 INJECTION

Fruit preparation injection point into the white mass

1 WHITE MASS TRANSFER

PCM Hycare™ (p.18)
Moineau™ technology



AT YOUR SERVICE

In order to provide the best use of our pumps and pumping systems, we offer a wide range of pre- and post-sales services.

All of our services are designed with one goal in mind: optimising the performance of PCM pumps and systems. From preventive maintenance to spare parts management, from equipment upgrading to training, we strive to best contribute to the productivity of our customers.

EXTENDED WARRANTY

The extended warranty ensures:

- an extension of our guarantee according to our General Sales Conditions,
- the best solution for delayed installations or commissioning cases,
- the peace of mind at a reasonable cost.

Our extensive service includes also an extension for the general guarantee conditions for a period from one to four years according to your requirements.

TESTS

To ensure the performance and lifespan of a pump or a system, it is vital that the equipment is engineered to meet the needs of the material being handled. That is why we offer a variety of tests:

- chemical compatibility tests,
- viscosity tests,
- abrasiveness tests.

TRAINING

In order to support and train the professionals who handle our pumps and systems, we can arrange training sessions either on customer or PCM site.

The use of achieved knowledge enables the participants of the training to maintain the value of the pump or system to minimise the consequential costs for maintenance or service even more.

MAINTENANCE, REPAIRING & UPGRADES

We offer a full range of services to ensure optimum operation of your pumps as well as time and cost savings.

Maintenance services for PCM pumps are provided by our highly trained engineers. This ensures that pumps and systems are maintained at optimal operating levels. Our careful monitoring and expertise helps to minimise production downtime and increase the life span of the system.

We provide a wide range of after-sales services:

- on-site maintenance,
- PCM workshop maintenance,
- maintenance contracts,
- mechanical seals and rotors refurbishment,
- systems upgrade.

SPARE PARTS

Thanks to our worldwide network of sales agencies and distributors, you can obtain genuine PCM spare parts quickly. Using PCM spare parts ensures that PCM products last as long as possible, benefit from warranty protection and maintain their CE conformity until their end of life.

PCM experts are dedicated to spare parts and answer your request in the shortest time. Thus, available standard PCM spare parts can be delivered within 24hrs.

INSTALLATION AUDITS

The Life Cycle Costs audit will optimise the use of your pump while reducing costs related to inefficiency, rationalising your stock of spare parts and controlling your overall costs.

Our extensive service includes:

- a complete inspection of your facilities,
- an analysis of your spare parts consumption,
- a detailed report and our recommendations to help you optimise your costs.

COMMISSIONING

PCM pumps and systems are simple to use and efficient as long as they are installed and commissioned properly.

Through pre-operational checks and close monitoring of all equipment, our installation services implement stable and secure production.

Our installation services take the guesswork out of integrating a new pump into an existing system or installing a new pump from scratch. We provide start-up assistance, system integration engineering and training for operators.

NOTES

Ref B-000326 - Index K - May 2026 - Non contractual pictures